Specifications

Fuel Delivery System

Items	Specification	
Fuel Tank	Capacity	55 lit. (14.5 U.S.gal., 58.1 U.S.qt., 48.3 Imp.qt.)
Fuel Filter	Type	Paper type
Fuel Pressure Regulator	Regulated Fuel Pressure	324 ~ 363 kPa (3.3 ~ 3.7 kgf/cm², 46.9 ~ 52.6 psi)
Fuel Pump	Type	Electrical, in-tank type
	Driven by	Electric motor

Sensors

Manifold Absolute Pressure Sensor (MAPS)
▹ Type: Piezo-resistive pressure sensor type
▹ Specification

Pressure [kPa (kgf/cm², psi)]	Output Voltage (V)
20.0 (0.20, 2.9)	0.79
46.7 (0.47, 6.77)	1.84
101.3 (1.03, 14.7)	4.0

Intake Air Temperature Sensor (IATS)
▹ Type: Thermistor type
▹ Specification

Temperature [°C(°F)]	Resistance (kΩ)
-40(-40)	40.93 ~ 48.35
-20(-4)	13.89 ~ 16.03
0(32)	5.38 ~ 6.09
10(50)	3.48 ~ 3.90
20(68)	2.31 ~ 2.57
40(104)	1.08 ~ 1.21
50(122)	0.76 ~ 0.85
60(140)	0.54 ~ 0.62
80(176)	0.29 ~ 0.34

Engine Coolant Temperature Sensor (ECTS)
▹ Type: Thermistor type
▹ Specification

Temperature [°C(°F)]	Resistance (kΩ)
-40(-40)	48.14
-20(-4)	14.13 ~ 16.83
0(32)	5.79
20(68)	2.31 ~ 2.59
40(104)	1.15
60(140)	0.59

mcx30.com

Throttle Position Sensor (TPS) [integrated into ETC Module]
▹ Type: Variable resistor type
▹ Specification

Throttle Angle(°)	Output Voltage (V)	
	TPS1	TPS2
0	0	5.0
10	0.48	4.52
20	0.95	4.05
30	1.43	3.57
40	1.90	3.10
50	2.38	2.62
60	2.86	2.14
70	3.33	1.67
80	3.81	1.19
90	4.29	0.71
100	4.76	0.24
105	5.0	0
C.T (6~15°)	0.29 ~ 0.71	4.29 ~ 4.71
W.O.T (93~102°)	4.43 ~ 4.86	0.14 ~ 0.57

Item	Resistance (kΩ)
TPS1	0.875 ~ 1.625 [20°C(68°F)]
TPS2	0.875 ~ 1.625 [20°C(68°F)]

Crankshaft Position Sensor (CKPS)
▹ Type: Hall effect type
Camshaft Position Sensor (CMPS)
▹ Type: Hall effect type
Knock Sensor (KS)
▹ Type: Piezo-electricity type
▹ Specification

Item	Specification
Capacitance (pF)	850 ~ 1,150

Heated Oxygen Sensor (HO2S) [Bank 1/Sensor 1]
▹ Type: Zirconia (ZrO2) [Linear] type
▹ Specification

Item	Specification
Heater Resistance (Ω)	2.5 ~ 4.0 [20°C(69.8°F)]

Heated Oxygen Sensor (HO2S) [Bank 1/Sensor 2]
▹ Type: Zirconia (ZrO2) [Binary] type
▹ Specification

A/F Ratio (λ)	Output Voltage(V)
RICH	Approx. 0.9
LEAN	Approx. 0.04

mcx30.com

Item	Specification
Heater Resistance (Ω)	3.3 ~ 4.1 [21°C(69.8°F)]

Accelerator Position Sensor (APS)
▹ Type: Variable resistor type
▹ Specification

Accelerator Position	Output Voltage (V)	
	APS1	APS2
C.T	0.7 ~ 0.8	0.29 ~ 0.46
W.O.T	3.85 ~ 4.35	1.93 ~ 2.18

Fuel Tank Pressure Sensor (FTPS)
▹ Type: Piezo - Resistivity type
▹ Specification

Pressure [kPa (kgf/cm², in H2O)	Output Voltage (V)
-6.67 (-0.068, -26.8)	0.5
0	2.5
+6.67 (0.068, 26.8)	4.5

Actuators

Injector
▹ Specification

Item	Specification
Coil Resistance (Ω)	13.8 ~ 15.2 [20°C(68°F)]

ETC Motor [integrated into ETC Module]
▹ Specification

Item	Specification
Coil Resistance (Ω)	1.2 ~ 1.8 [20°C(68°F)]

Purge Control Solenoid Valve (PCSV)
▹ Specification

Item	Specification
Coil Resistance (Ω)	19.0 ~ 22.0 [20°C(68°F)]

CVVT Oil Control Valve (OCV)
▹ Specification

Item	Specification
Coil Resistance (Ω)	6.9 ~ 7.9 [20°C(68°F)]

Variable Intake Solenoid (VIS) Valve
▹ Specification

Item	Specification
Coil Resistance (Ω)	30.0 ~ 35.0 [20°C(68°F)]

Variable Charge Motion Actuator (VCMA)
▹ Specification
[Motor]

mcx30.com

Coil Resistance (Ω)	3.4 ~ 4.4 [20°C(68°F)]

[Position Sensor]

Item	Specification
Coil Resistance (kΩ)	3.44 ~ 5.16 [20°C(68°F)]

Ignition Coil
▹ Type: Stick type
▹ Specification

Item	Specification
Primary Coil Resistance (Ω)	0.62 ± 10%[20°C(68°F)]
Secondary Coil Resistance (kΩ)	7.0 ± 15%[20°C(68°F)]

Canister Close Valve (CCV)
▹ Specification

Item	Specification
Coil Resistance (Ω)	19.8 ~ 21.8 [20°C(68°F)]

Service Standard

Item		Specification	
Ignition Timing (°)		BTDC 8 ± 10	
Idle Speed (rpm)	A/C OFF	Neutral, N, P-range	620 ± 100
		D-range	620 ± 100
	A/C ON	Neutral, N, P-range	620 ± 100
		D-range	620 ± 100

Tightening Torques

Engine Control System

Item	kgf.m	N.m	lb-ft
ECM installation bolt	0.8 ~ 1.2	7.8 ~ 11.8	5.8 ~ 8.7
Manifold absolute pressure sensor installation bolt	1.0 ~ 1.2	9.8 ~ 11.8	7.2 ~ 8.7
Crankshaft position sensor installation bolt	1.0 ~ 1.2	9.8 ~ 11.8	7.2 ~ 8.7
Crankshaft position sensor cover installation bolt (M8)	1.9 ~ 2.4	18.6 ~ 23.5	13.7 ~ 17.4
Crankshaft position sensor cover installation bolt (M6)	1.0 ~ 1.2	9.8 ~ 11.8	7.2 ~ 8.7
Camshaft position sensor (Bank 1 / Intake) installation bolt	1.0 ~ 1.2	9.8 ~ 11.8	7.2 ~ 8.7
Camshaft position sensor (Bank 1 / Exhaust) installation bolt	1.0 ~ 1.2	9.8 ~ 11.8	7.2 ~ 8.7
Knock sensor installation bolt	1.9 ~ 2.4	18.6 ~ 23.5	13.7 ~ 17.4
Heated oxygen sensor (Bank 1 / sensor 1) installation [SULEV]	4.0 ~ 5.0	39.2 ~ 49.1	28.9 ~ 36.2
Heated oxygen sensor (Bank 1 / sensor 2) installation [SULEV]	4.0 ~ 5.0	39.2 ~ 49.1	28.9 ~ 36.2
Heated oxygen sensor (Bank 1 / sensor 1) installation [ULEV]	4.5 ~ 5.0	44.1 ~ 49.1	32.6 ~ 36.2
Heated oxygen sensor (Bank 1 / sensor 2) installation [ULEV]	4.5 ~ 5.0	44.1 ~ 49.1	32.6 ~ 36.2
Electronic throttle body installation bolt	0.8 ~ 1.2	7.8 ~ 11.8	5.8 ~ 8.7

mcx30.com

CVVT oil control valve (Bank 1 / Intake) installation bolt	1.0 ~ 1.2	9.8 ~ 11.8	7.2 ~ 8.7
CVVT oil control valve (Bank 1 / Exhaust) installation bolt	1.0 ~ 1.2	9.8 ~ 11.8	7.2 ~ 8.7
Ignition coil installation bolt	1.0 ~ 1.2	9.8 ~ 11.8	7.2 ~ 8.7
Canister close valve & fuel tank air filter bracket installation nut	0.8 ~ 1.2	7.8 ~ 11.8	5.8 ~ 8.7
Variable charge motion actuator installation bolt	0.8 ~ 1.2	7.8 ~ 11.8	5.8 ~ 8.7

Fuel Delivery System

Item	kgf.m	N.m	lb-ft
Fuel tank installation nut	4.0 ~ 5.5	39.2 ~ 54.0	28.9 ~ 39.8
Filler-neck assembly bracket installation nut	0.4 ~ 0.6	3.9 ~ 5.9	2.9 ~ 4.3
Accelerator pedal module installation nut	1.7 ~ 2.6	16.7 ~ 25.5	12.3 ~ 18.8
Accelerator pedal module installation bolt	0.8 ~ 1.2	7.8 ~ 11.8	5.8 ~ 8.7
Delivery pipe installation bolt	1.9 ~ 2.4	18.6 ~ 23.5	13.7 ~ 17.4
Delivery pipe installation nut (↔ Fuel feed tube)	0.8 ~ 1.0	7.8 ~ 9.8	5.8 ~ 7.2
Fuel pump locking ring (Loosening torque)	Min. 7	Min. 68.65	Min. 50.6

Fuel System > General Information > Special Service Tools

Special Service Tools

Tool (Number and Name)	Illustration	Application
Fuel Pressure Gauge (09353-24100)	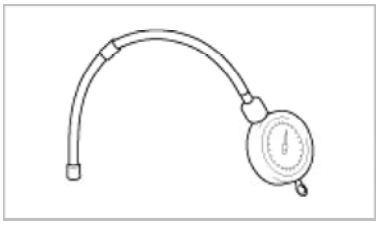	Measuring the fuel line pressure
Fuel Pressure Gauge Adapter (09353-38000)	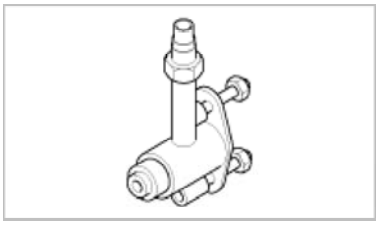	Connection between the delivery pipe and the fuel feed line
Fuel Pressure Gauge Connector (09353-24000)	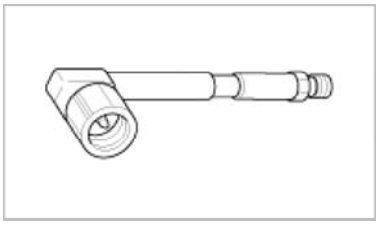	Connection between the Fuel Pressure Gauge (09353-24100) and the Fuel Pressure Gauge Adapter (09353-38000)
Heated Oxygen Sensor Socket Wrench (09392-2H100)	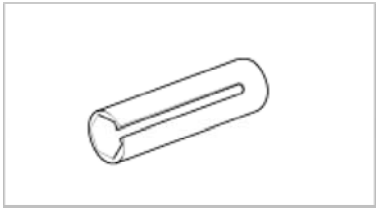	Removal and installation of the heated oxygen sensor
Fuel Pump Locking Ring Remover		Removal and installation of the fuel

mcx30.com

Fuel System > General Information > Troubleshooting

Basic Troubleshooting

Basic Troubleshooting Guide

mcx30.com

2	Analyze Customer's Problem

- Ask the customer about the conditions and environment relative to the issue. (Use CUSTOMER PROBLEM ANALYSIS SHEET).

3	Verify Symptom, and then Check DTC and Freeze Frame Data

- Connect the GDS to Diagnostic Link Connector (DLC).
- Record the DTC and Freeze Frame Data.

NOTE

To erase DTC and Freeze Frame Data, refer to Step 5.

4	Confirm the Inspection Procedure for the System or Part

- Using the SYMPTOM TROUBLESHOOTING GUIDE CHART, choose the correct inspection procedure for the system or part to be checked.

5	Erase the DTC and Freeze Frame Data

WARNING

NEVER erase DTC and Freeze Frame Data before completing Step 2 : MIL/DTC in CUSTOMER PROBLEM ANALYSIS SHEET.

6	Inspect Vehicle Visually

- Go to Step 11, if you recognize the problem.

7	Recreate (Simulate) Symptoms of the DTC

- Try to recreate or simulate the symptoms and conditions of the malfunction as described by customer.
- If DTC(s) is/are displayed, simulate the condition according to troubleshooting procedure for the DTC.

8	Confirm Symptoms of Problem

- If DTC(s) is/are not displayed, go to Step 9.
- If DTC(s) is/are displayed, go to Step 11.

9	Recreate (Simulate) Symptom

- Try to recreate or simulate the condition of the malfunction as described by the customer.

10	Check the DTC

- If DTC(s) does(do) not occur, refer to INTERMITTENT PROBLEM PROCEDURE in BASIC INSPECTION PROCEDURE.
- If DTC(s) occur(s), go to Step 11.

11	Perform Troubleshooting Procedure for DTC

12	Adjust or repair the vehicle

13	Confirmation test

14	END

Customer Problem Analysis Sheet

mcx30.com

1. VEHICLE INFORMAITON

VIN No.		Transmission	☐ M/T ☐ A/T ☐ CVT ☐ etc.
Production date		Driving type	☐ 2WD (FF) ☐ 2WD (FR) ☐ 4WD
Odometer Reading	_____km/mile	DPF (Diesel Engine)	☐ With DPF ☐ Without DPF

2. SYMPTOMS

☐ Unable to start	☐ Engine does not turn over ☐ Incomplete combustion ☐ Initial combustion does not occur
☐ Difficult to start	☐ Engine turns over slowly ☐ Other_____
☐ Poor idling	☐ Rough idling ☐ Incorrect idling ☐ Unstable idling (High:_____ rpm, Low: _____rpm) ☐ Other
☐ Engine stall	☐ Soon after starting ☐ After accelerator pedal depressed ☐ After accelerator pedal released ☐ During A/C ON ☐ Shifting from N to D-range ☐ Other_____
☐ Others	☐ Poor driving (Surge) ☐ Knocking ☐ Poor fuel economy ☐ Back fire ☐ After fire ☐ Other_____

3. ENVIRONMENT

Problem frequency	☐ Constant ☐ Sometimes (_____) ☐ Once only ☐ Other_____
Weather	☐ Fine ☐ Cloudy ☐ Rainy ☐ Snowy ☐ Other_____
Outdoor temperature	Approx. _____ °C/°F
Place	☐ Highway ☐ Suburbs ☐ Inner City ☐ Uphill ☐ Downhill ☐ Rough road ☐ Other_____
Engine temperature	☐ Cold ☐ Warming up ☐ After warming up ☐ Any temperature
Engine operation	☐ Starting ☐ Just after starting (____min) ☐ Idling ☐ Racing ☐ Driving ☐ Constant speed ☐ Acceleration ☐ Deceleration ☐ A/C switch ON/OFF ☐ Other_____

4. MIL/DTC

MIL (Malfunction Indicator Lamp)		☐ Remains ON ☐ Sometimes lights up ☐ Does not light
DTC	Normal check (Pre-check)	☐ Normal ☐ DTC (_____) ☐ Freeze Frame Data
	Check mode	☐ Normal ☐ DTC (_____) ☐ Freeze Frame Data

5. ECM/PCM INFORMATION

ECM/PCM Part No.	
ROM ID	

Basic Inspection Procedure

Measuring Condition of Electronic Parts' Resistance

The measured resistance at high temperature after vehicle running may be high or low. So all resistance must be measured at ambient temperature (20°C, 68°F), unless stated otherwise.

> **NOTE**
>
> The measured resistance in except for ambient temperature (20°C, 68°F) is reference value.

Intermittent Problem Inspection Procedure

Sometimes the most difficult case in troubleshooting is when a problem symptom occurs but does not occur again during

mcx30.com

case, the technician should thoroughly make out a "Customer Problem Analysis Sheet" and recreate (simulate) the environment and condition which occurred when the vehicle was having the issue.

1. Clear Diagnostic Trouble Code (DTC).
2. Inspect connector connection, and check terminal for poor connections, loose wires, bent, broken or corroded pins, and then verify that the connectors are always securely fastened.

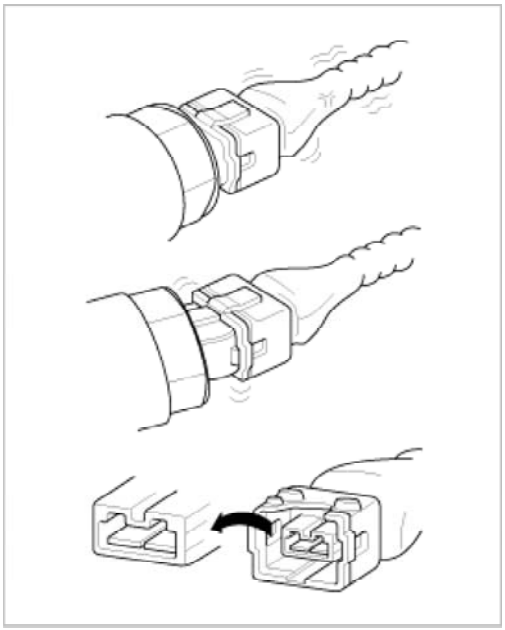

3. Slightly shake the connector and wiring harness vertically and horizontally.
4. Repair or replace the component that has a problem.
5. Verify that the problem has disappeared with the road test.

● Simulating Vibration

1) Sensors and Actuators
: Slightly vibrate sensors, actuators or relays with finger.

> WARNING
>
> Strong vibration may break sensors, actuators or relays

2) Connectors and Harness
: Lightly shake the connector and wiring harness vertically and then horizontally.

● Simulating Heat

1) Heat components suspected of causing the malfunction with a hair dryer or other heat source.

> WARNING
>
> • DO NOT heat components to the point where they may be damaged.
> • DO NOT heat the ECM directly.

● Simulating Water Sprinkling

1) Sprinkle water onto vehicle to simulate a rainy day or a high humidity condition.

> WARNING
>
> DO NOT sprinkle water directly into the engine compartment or electronic components.

● Simulating Electrical Load

1) Turn on all electrical systems to simulate excessive electrical loads (Radios, fans, lights, rear window defogger, etc.).

Connector Inspection Procedure

1. Handling of Connector
   A. Never pull on the wiring harness when disconnecting connectors.

mcx30.com

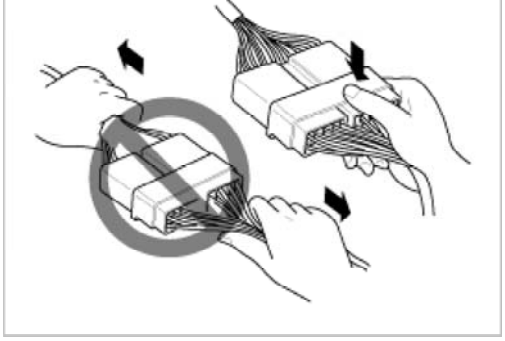

B. When removing the connector with a lock, press or pull locking lever.

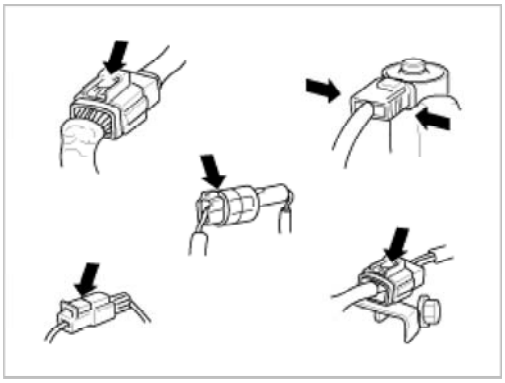

C. Listen for a click when locking connectors. This sound indicates that they are securely locked.

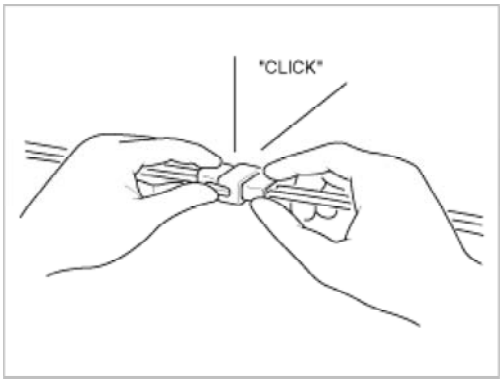

D. When a tester is used to check for continuity, or to measure voltage, always insert tester probe from wire harness side.

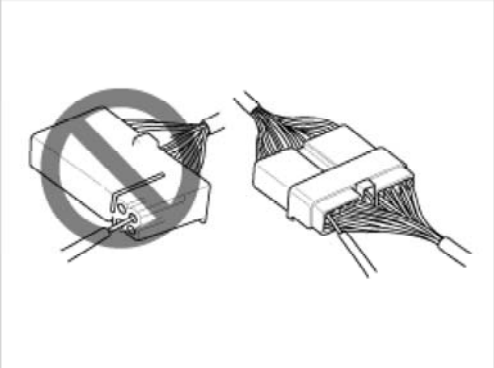

E. Check waterproof connector terminals from the connector side. Waterproof connectors cannot be accessed from harness side.

mcx30.com

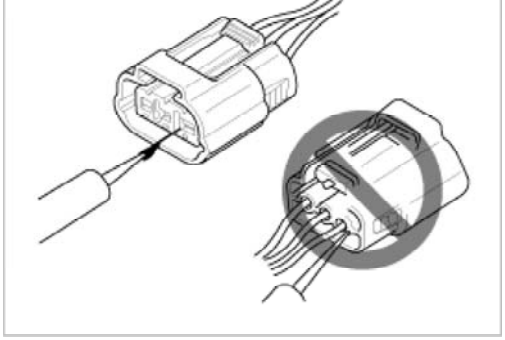

NOTE

- Use a fine wire to prevent damage to the terminal.
- Do not damage the terminal when inserting the tester lead.

2. Checking Point for Connector
   A. While the connector is connected:
      Hold the connector, check connecting condition and locking efficiency.
   B. When the connector is disconnected:
      Check missed terminal, crimped terminal or broken core wire by slightly pulling the wire harness.
      Visually check for rust, contamination, deformation and bend.
   C. Check terminal tightening condition:
      Insert a spare male terminal into a female terminal, and then check terminal tightening conditions.
   D. Pull lightly on individual wires to ensure that each wire is secured in the terminal.

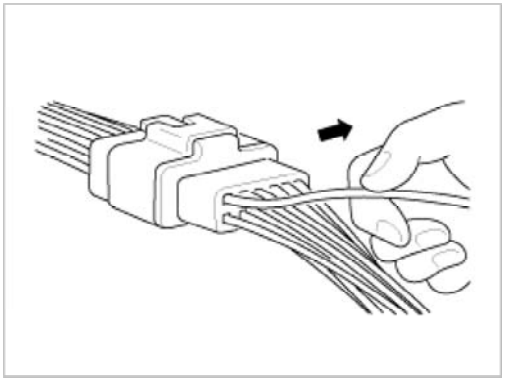

3. Repair Method of Connector Terminal
   A. Clean the contact points using air gun and/or shop rag.

NOTE

Never use sand paper when polishing the contact points, otherwise the contact point may be damaged.

   B. In case of abnormal contact pressure, replace the female terminal.

Wire Harness Inspection Procedure

1. Before removing the wire harness, check the wire harness position and crimping in order to restore it correctly.
2. Check whether the wire harness is twisted, pulled or loosened.
3. Check whether the temperature of the wire harness is abnormally high.
4. Check whether the wire harness is rotating, moving or vibrating against the sharp edge of a part.
5. Check the connection between the wire harness and any installed part.
6. If the covering of wire harness is damaged; secure, repair or replace the harness.

Electrical Circuit Inspection Procedure

- Check Open Circuit

1. Procedures for Open Circuit

mcx30.com

B. Voltage Check

If an open circuit occurs (as seen in [FIG. 1]), it can be found by performing Step 2 (Continuity Check Method) or Step 3 (Voltage Check Method) as shown below.

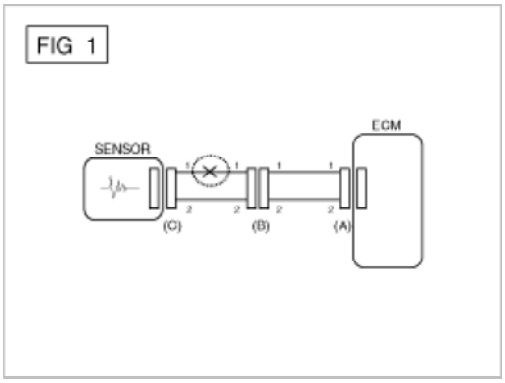

2. Continuity Check Method

> **NOTE**
>
> When measuring for resistance, lightly shake the wire harness above and below or from side to side.

Specification (Resistance)

1Ω or less → Normal Circuit

1MΩ or Higher → Open Circuit

A. Disconnect connectors (A), (C) and measure resistance between connector (A) and (C) as shown in [FIG. 2].
In [FIG.2.] the measured resistance of line 1 and 2 is higher than 1MΩ and below 1 Ω respectively. Specifically the open circuit is line 1 (Line 2 is normal). To find exact break point, check sub line of line 1 as described in next step.

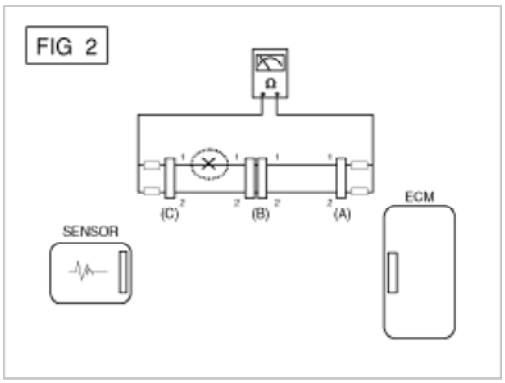

B. Disconnect connector (B), and measure for resistance between connector (C) and (B1) and between (B2) and (A) as shown in [FIG. 3].
In this case the measured resistance between connector (C) and (B1) is higher than 1MΩ and the open circuit is between terminal 1 of connector (C) and terminal 1 of connector (B1).

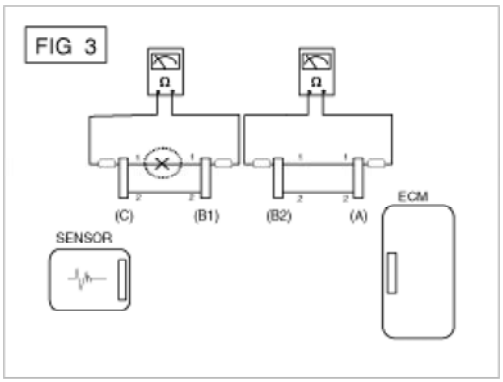

3. Voltage Check Method

A. With each connector still connected, measure the voltage between the chassis ground and terminal 1 of each connectors (A), (B) and (C) as shown in [FIG. 4].

mcx30.com

(C) and (B).

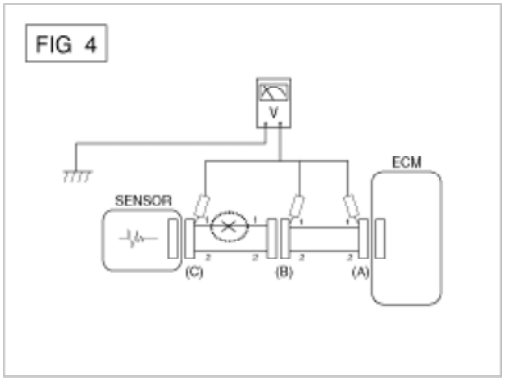

● Check Short Circuit

1. Test Method for Short to Ground Circuit

   A. Continuity Check with Chassis Ground

   If short to ground circuit occurs as shown in [FIG. 5], the broken point can be found by performing Step 2 (Continuity Check Method with Chassis Ground) as shown below.

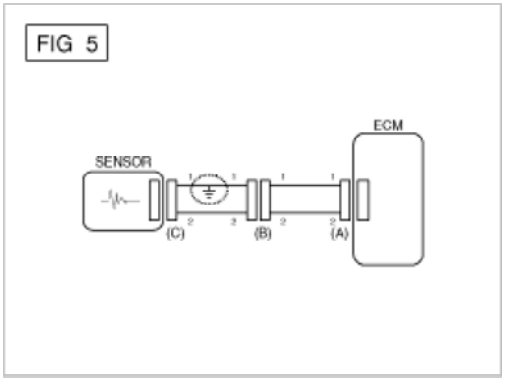

2. Continuity Check Method (with Chassis Ground)

> **NOTE**
>
> Lightly shake the wire harness above and below, or from side to side when measuring the resistance.

Specification (Resistance)

1Ω or less → Short to Ground Circuit

1MΩ or Higher → Normal Circuit

A. Disconnect connectors (A), (C) and measure for resistance between connector (A) and Chassis Ground as shown in [FIG. 6].

   The measured resistance of line 1 and 2 in this example is below 1 Ω and higher than 1MΩ respectively.

   Specifically the short to ground circuit is line 1 (Line 2 is normal). To find exact broken point, check the sub line of line 1 as described in the following step.

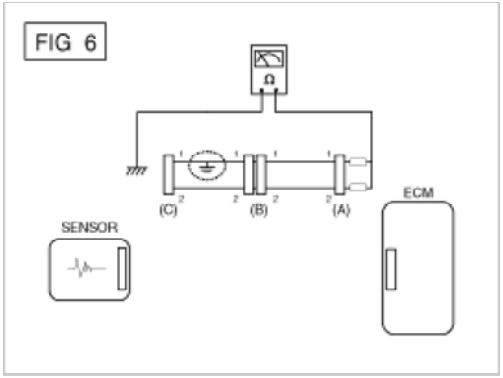

B. Disconnect connector (B), and measure the resistance between connector (A) and chassis ground, and between

mcx30.com

The measured resistance between connector (B1) and chassis ground is 1Ω or less. The short to ground circuit is between terminal 1 of connector (C) and terminal 1 of connector (B1).

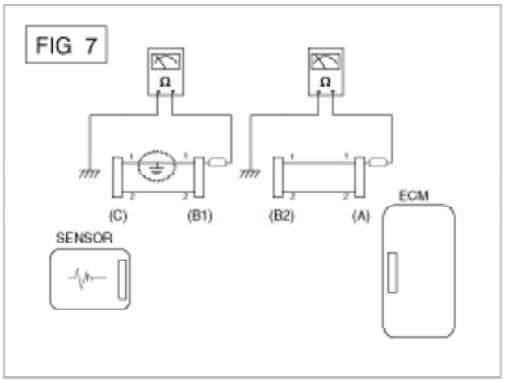

● Testing For Voltage Drop

This test checks for voltage drop along a wire, or through a connection orswitch.

1) Connect the positive lead of a voltmeter to the end of the wire (or to the side of the connector or switch) closest to the battery.
2) Connect the negative lead to the other end of the wire. (or the other side of the connector or switch)
3) Operate the circuit.
4) The voltmeter will show the difference in voltage between the two points. A difference, or drop of more than 0.1 volts (50mV in 5V circuits), may indicate a problem. Check the circuit for loose or dirty connections.

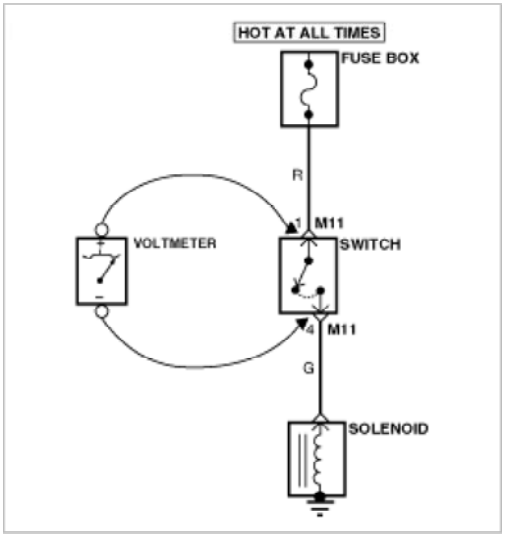

Symptom Troubleshooting Guide Chart

Main symptom	Diagnostic procedure	Also check for
Unable to start (Engine does not turn over)	1. Test the battery 2. Test the starter 3. Inhibitor switch (A/T) or clutch start switch (M/T)	
Unable to start (Incomplete combustion)	1. Test the battery 2. Check the fuel pressure 3. Check the ignition circuit 4. Troubleshooting the immobilizer system (In case of immobilizer lamp flashing)	• DTC • Low compression • Intake air leaks • Slipped or broken timing belt • Contaminated fuel
Difficult to start	1. Test the battery 2. Check the fuel pressure 3. Check the ECT sensor and circuit (Check DTC) 4. Check the ignition circuit	• DTC • Low compression • Intake air leaks • Contaminated fuel

mcx30.com

Poor idling (Rough, unstable or incorrect Idle)	1. Check the fuel pressure 2. Check the Injector 3. Check the long term fuel trim and short term fuel trim (Refer to CUSTOMER DATASTREAM) 4. Check the idle speed control circuit (Check DTC) 5. Inspect and test the Throttle Body 6. Check the ECT sensor and circuit (Check DTC)	• DTC • Low compression • Intake air leaks • Contaminated fuel • Weak ignition spark
Engine stall	1. Test the Battery 2. Check the fuel pressure 3. Check the idle speed control circuit (Check DTC) 4. Check the ignition circuit 5. Check the CKPS Circuit (Check DTC)	• DTC • Intake air leaks • Contaminated fuel • Weak ignition spark
Poor driving (Surge)	1. Check the fuel pressure 2. Inspect and test Throttle Body 3. Check the ignition circuit 4. Check the ECT Sensor and Circuit (Check DTC) 5. Test the exhaust system for a possible restriction 6. Check the long term fuel trim and short term fuel trim (Refer to CUSTOMER DATASTREAM)	• DTC • Low compression • Intake air leaks • Contaminated fuel • Weak ignition spark
Knocking	1. Check the fuel pressure 2. Inspect the engine coolant 3. Inspect the radiator and the electric cooling fan 4. Check the spark plugs	• DTC • Contaminated fuel
Poor fuel economy	1. Check customer's driving habitsIs · A/C on full time or the defroster mode on? · Are tires at correct pressure? · Is excessively heavy load being carried? · Is acceleration too much, too often? 2. Check the fuel pressure 3. Check the injector 4. Test the exhaust system for a possible restriction 5. Check the ECT sensor and circuit	• DTC • Low compression • Intake air leaks • Contaminated fuel • Weak ignition spark
Hard to refuel (Overflow during refueling)	1. Test the canister close valve 2. Inspect the fuel filler hose/pipe · Pinched, kinked or blocked? · Filler hose is torn 3. Inspect the fuel tank vapor vent hose between the EVAP. canister and air filter 4. Check the EVAP. canister	• Malfunctioning gas station filling nozzle (If this problem occurs at a specific gas station during refueling)

Fuel System > Engine Control System > Description and Operation

OBD-II review

1. Overview

The California Air Resources Board (CARB) began regulation of On Board Diagnostics (OBD) for vehicles sold in California beginning with the 1988 model year. The first phase, OBD-I, required monitoring of the fuel metering system, Exhaust Gas Recirculation (EGR) system and additional emission related components. The Malfunction Indicator Lamp (MIL) was required to light and alert the driver of the fault and the need for repair of the emission control system. Associated with the MIL was a fault code or Diagnostic Trouble Code (DTC) idenfying the specific area of the fault.
The OBD system was proposed by CARB to improve air quality by identifying vehicle exceeding emission standards. Passage of the Federal Clean Air Act Amendments in 1990 has also prompted the Environmental Protection Agency (EPA) to develop On Board Diagnostic requirements. CARB OBD-II regulations were followed until 1999 when the federal

mcx30.com

The OBD-II system meets government regulations by monitoring the emission control system. When a system or component exceeds emission threshold or a component operates outside tolerance, a DTC will be stored and the MIL illuminated.
The diagnostic executive is a computer program in the Engine Control Module (ECM) or PowertrainControl Module (PCM) that coordinates the OBD-II self-monitoring system. This program controls all the monitors and interactions, DTC and MIL operation, freeze frame data and scan tool interface.
Freeze frame data describes stored engine conditions, such as state of the engine, state of fuel control, spark, RPM, load and warm status at the point the first fault is detected. Previously stored conditions will be replaced only if a fuel or misfire fault is detected. This data is accessible with the scan tool to assist in repairing the vehicle.
The center of the OBD-II system is a microprocessor called the Engine Control Module (ECM) or Powertrain Control Module(PCM).
The ECM or PCM receives input from sensors and other electronic components (switches, relays, and others) based on information received and programmed into its memory (keep alive random access memory, and others), the ECM or PCM generates output signals to control various relays, solenoids and actuators.

2. Configuration of hardware and related terms

1) GST (Generic scan tool)

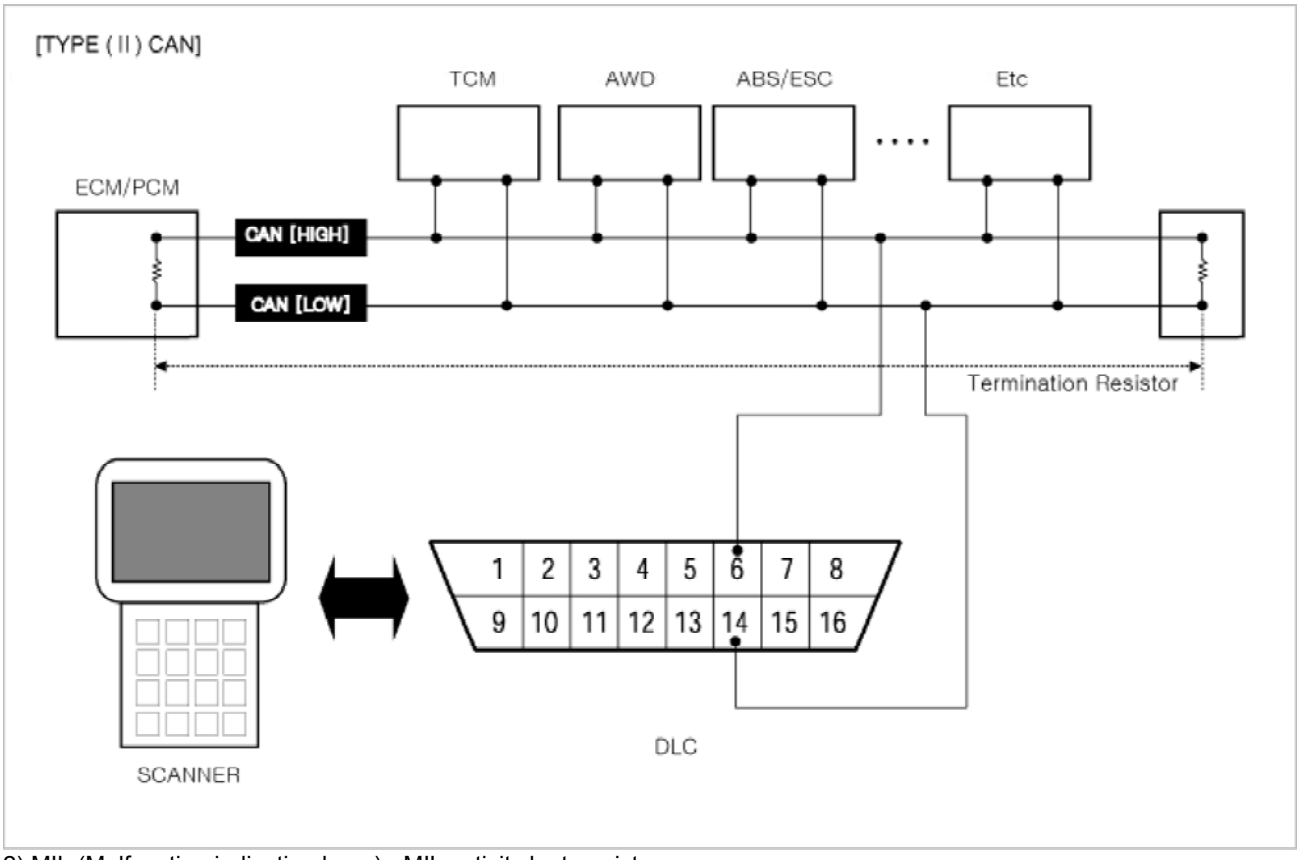

2) MIL (Malfunction indication lamp) - MIL activity by transistor

mcx30.com

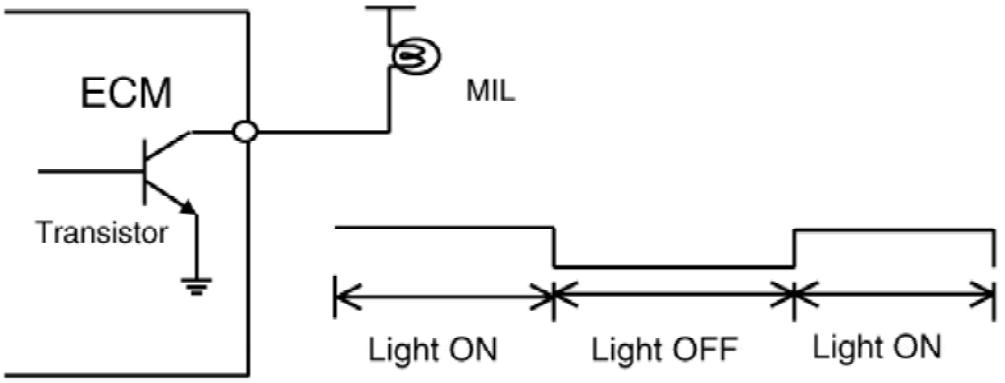

The Malfunction Indicator Lamp (MIL) is connected between ECM or PCM-terminal Malfunction Indicator Lamp and battery supply (open collector amplifier).
In most cars, the MIL will be installed in the instrument panel. The lamp amplifier can not be damaged by a short circuit. Lamps with a power dissipation much greater than total dissipation of the MIL and lamp in the tester may cause a fault indication.
▹ At ignition ON and engine revolution (RPM)< MIN. RPM, the MIL is switched ON for an optical check by the driver.
3) MIL illumination

When the ECM or PCM detects a malfunction related emission during the first driving cycle, the DTC and engine data are stored in the freeze frame memory. The MIL is illuminated only when the ECM or PCM detects the same malfunction related to the DTC in two consecutive driving cycles.
4) MIL elimination

● Misfire and Fuel System Malfunctions:
For misfire or fuel system malfunctions, the MIL may be eliminated if the same fault does not reoccur during monitoring in three subsequent sequential driving cycles in which conditions are similar to those under which the malfunction was first detected.
● All Other Malfunctions:
For all other faults, the MIL may be extinguished after three subsequent sequential driving cycles during which the monitoring system responsible for illuminating the MIL functions without detecting the malfunction and if no other malfunction has been identified that would independently illuminate the MIL according to the requirements outlined above.
5) Erasing a fault code

The diagnostic system may erase a fault code if the same fault is not re-registered in at least 40 engine warm-up cycles, and the MIL is not illuminated for that fault code.
6) Communication Line (CAN)

- Bus Topology : Line (bus) structure
- Wiring : Twisted pair wire
- Off Board DLC Cable Length : Max. 5m
- Data Transfer Rate
- Diagnostic : 500 kbps
- Service Mode (Upgrade, Writing VIN) : 500 or 1Mbps)

7) Driving cycle

A driving cycle consists of engine start up, and engine shut off.
8) Warm-up cycle

A warm-up cycle means sufficient vehicle operation such that the engine coolant temperature has risen by at least 40 degrees Fahrenheit from engine starting and reaches a minimum temperature of at least 160 degrees Fahrenheit.
9) Trip cycle

A trip means vehicle operation (following an engine-off period) of duration and driving mode such that all components and systems are monitored at least once by the diagnostic system except catalyst efficiency or evaporative system monitoring when a steady-speed check is used, subject to the limitation that the manufacturer-defined trip monitoring conditions shall all be encountered at least once during the first engine start portion of the applicable FTP cycle.
10) DTC format

- Diagnostic Trouble Code (SAE J2012)

mcx30.com

The letter of the beginning of the DTC identifies the function of the monitored device that has failed. A "P" indicates a powertrain device, "C" indicates a chassis device. "B" is for body device and "U" indicates a network or data link code. The first number indicates if the code is generic (common to all manufacturers) or if it is manufacturer specific. A "0" & "2" indicates generic, "1" indicates manufacturer-specific. The second number indicates the system that is affected with a number between 1 and 7.
The following is a list showing what numbers are assigned to each system.

1. Fuel and air metering
2. Fuel and air metering(injector circuit malfunction only)
3. Ignition system or misfire
4. Auxiliary emission controls
5. Vehicle speed controls and idle control system
6. Computer output circuits
7. Transmission

The last two numbers of the DTC indicates the component or section of the system where the fault is located.
11) Freeze frame data

When a freeze frame event is triggered by an emission related DTC, the ECM or PCM stores various vehicle information as it existed the moment the fault ocurred. The DTC number along with the engine data can be useful in aiding a technician in locating the cause of the fault. Once the data from the 1st driving cycle DTC ocurrence is stored in the freeze frame memory, it will remain there even when the fault ocurrs again (2nd driving cycle) and the MIL is illuminated.

- Freeze Frame List

1) Calculated Load Value
2) Engine RPM
3) Fuel Trim
4) Fuel Pressure (if available)
5) Vehicle Speed (if available)
6) Coolant Temperature
7) Intake Manifold Pressure (if available)
8) Closed-or Open-loop operation
9) Fault code

3. OBD-II system readiness tests

1) Catalyst monitoring

The catalyst efficiency monitor is a self-test strategy within the ECM or PCM that uses the downstream Heated Oxygen Sensor (HO2S) to determine when a catalyst has fallen below the minimum level of effectiveness in its ability to control exhaust emission.
2) Misfire monitoring

Misfire is defined as the lack of proper combustion in the cylinder due to the absence of spark, poor fuel metering, or poor compression. Any combustion that does not occur within the cylinder at the proper time is also a misfire. The misfire detection monitor detects fuel, ignition or mechanically induced misfires. The intent is to protect the catalyst from permanent damage and to alert the customer of an emission failure or an inspection maintenance failure by illuminating the MIL . When a misfire is detected, special software called freeze frame data is enabled. The freeze frame data captures the operational state of the vehicle when a fault is detected from misfire detection monitor strategy.
3) Fuel system monitoring

The fuel system monitor is a self-test strategy within the ECM or PCM that monitors the adaptive fuel table The fuel control system uses the adaptive fuel table to compensate for normal variability of the fuel system components caused by wear or aging. During normal vehicle operation, if the fuel system appears biased lean or rich, the adaptive value table will shift the fuel delivery calculations to remove bias.
4) Engine cooling system monitoring

The cooling system monitoring is a self-test strategy within the ECM or PCM that monitors ECTS (Engine Coolant Temperature Sensor) and thermostat about circuit continuity, output range, rationality faults.
5) O2 sensor monitoring

OBD-II regulations require monitoring of the upstream Heated O2 Sensor (H2OS) to detect if the deterioration of the sensor has exceeded thresholds. An additional HO2S is located downstream of the Warm-Up Three Way Catalytic Converter (WU-TWC) to determine the efficiency of the catalyst.
Although the downstream H2OS is similar to the type used for fuel control, it functions differently. The downstream HO2S is monitored to determine if a voltage is generated. That voltage is compared to a calibrated acceptable range.
6) Evaporative emission system monitoring

mcx30.com

complete evaporative system detects a leak or leaks that cumulatively are greater than or equal to a leak caused by a 0.040 inch and 0.020 inch diameter orifice.
7) Air conditioning system monitoring

The A/C system monitoring is a self-test strategy within the ECM or PCM that monitors malfunction of all A/C system components at A/C ON.
8) Comprehensive components monitoring

The comprehensive components monitoring is a self-test strategy within the ECM or PCM that detects fault of any electronic powertrain components or system that provides input to the ECM or PCM and is not exclusively an input to any other OBD-II monitor.
9) A/C system component monitoring

Requirement:
If a vehicle incorporates an engine control strategy that alters off idle fuel and/or spark control when the A/C system is on, the OBD II system shall monitor all electronic air conditioning system components for malfunctions that cause the system to fail to invoke the alternate control while the A/C system is on or cause the system to invoke the alternate control while the A/C system is off.
Additionally, the OBD II system shall monitor for malfunction all electronic air conditioning system components that are used as part of the diagnostic strategy for any other monitored system or component.
Implementation plan:
No engine control strategy incorporated that alters offidle fuel and/or spark control when A/C system is on. Malfuction of A/C system components is not used as a part of the diagnostic strategy for other monitored system or component.

Fuel System > Engine Control System > Components and Components Location

Components Location

mcx30.com

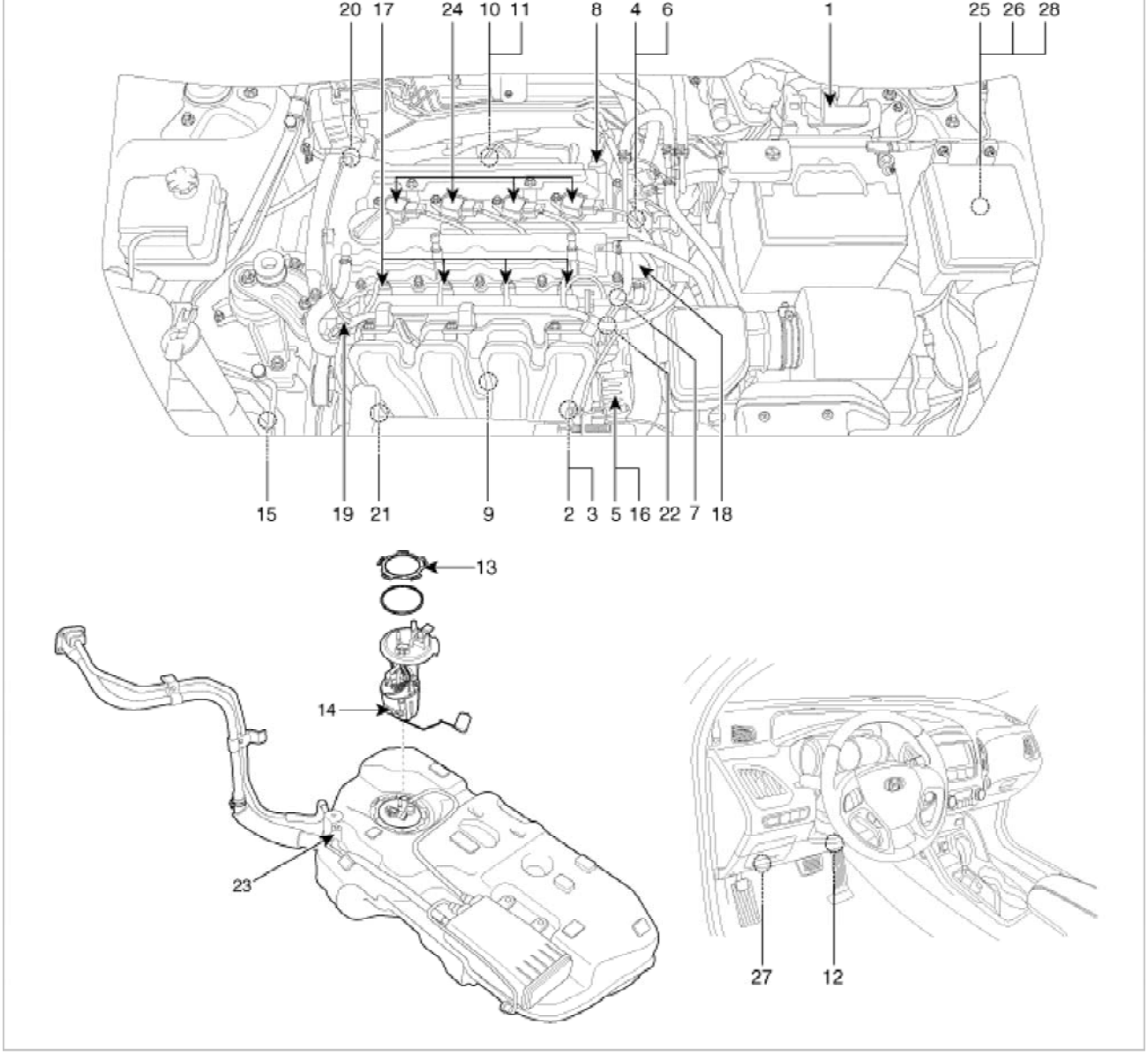

1. Engine Control Module (ECM) 2. Manifold Absolute Pressure Sensor (MAPS) 3. Intake Air Temperature Sensor (IATS) 4. Engine Coolant Temperature Sensor (ECTS) 5. Throttle Position Sensor (TPS) [integrated into ETC Module] 6. Crankshaft Position Sensor (CKPS) 7. Camshaft Position Sensor (CMPS) [Bank 1 / Intake] 8. Camshaft Position Sensor (CMPS) [Bank 1 / Exhaust] 9. Knock Sensor (KS) 10. Heated Oxygen Sensor (HO2S) [Bank 1 / Sensor 1] 11. Heated Oxygen Sensor (HO2S) [Bank 1 / Sensor 2] 12. Accelerator Position Sensor (APS) 13. Fuel Tank Pressure Sensor (FTPS) 14. Fuel Level Sensor (FLS)	15. A/C Pressure Transducer (APT) 16. ETC Motor [integrated into ETC Module] 17. Injector 18. Purge Control Solenoid Valve (PCSV) 19. CVVT Oil Control Valve (OCV) [Bank 1 / Intake] 20. CVVT Oil Control Valve (OCV) [Bank 1 / Exhaust] 21. Variable Intake Solenoid (VIS) Valve 22. Variable Charge Motion Actuator (VCMA) 23. Canister Close Valve (CCV) 24. Ignition Coil 25. Main Relay 26. Fuel Pump Relay 27. Data Link Connector (DLC) [16-Pin] 28. Multi-Purpose Check Connector [20-Pin]

1. Engine Control Module (ECM)	2. Manifold Absolute Pressure Sensor (MAPS) 3. Intake Air Temperature Sensor (IATS)

mcx30.com

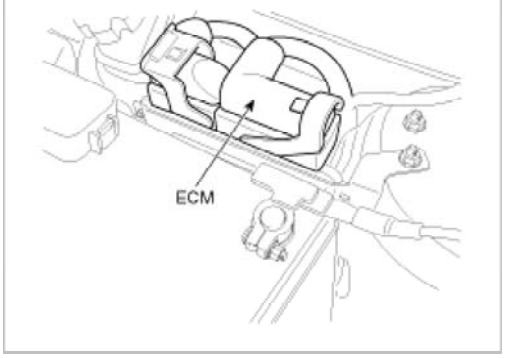	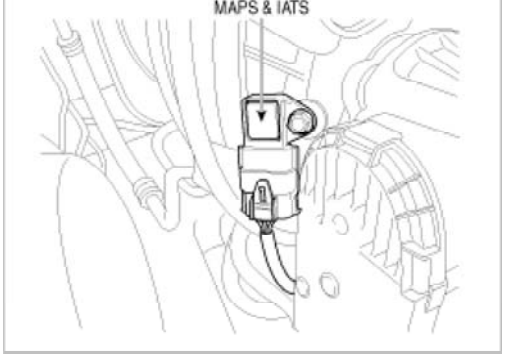
4. Engine Coolant Temperature Sensor (ECTS)	5. Throttle Position Sensor (TPS) 16. ETC Motor
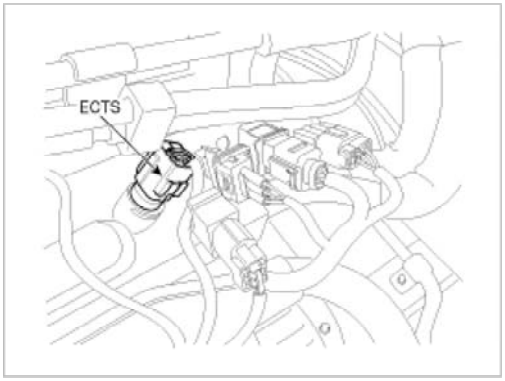	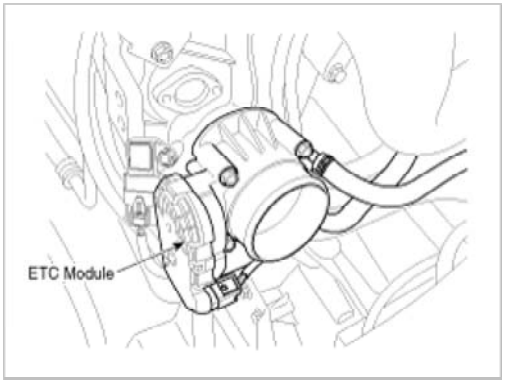
6. Crankshaft Position Sensor (CKPS)	7. Camshaft Position Sensor (CMPS) [Bank 1 / Intake]
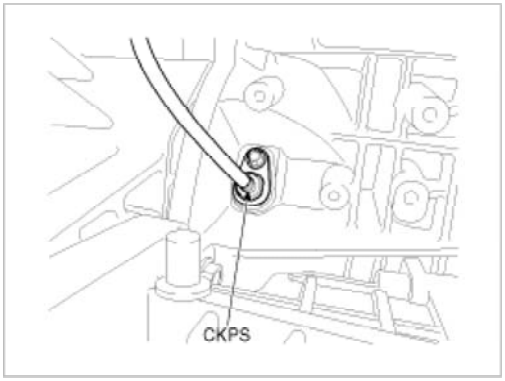	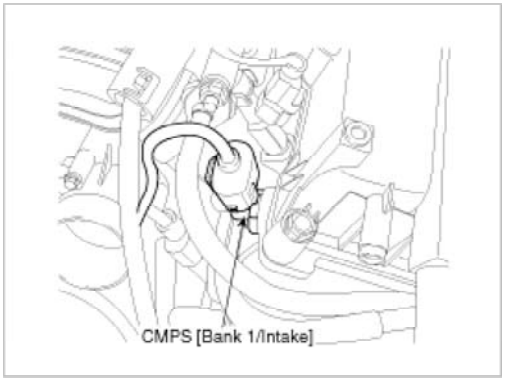
8. Camshaft Position Sensor (CMPS) [Bank 1 / Exhaust]	9. Knock Sensor (KS)
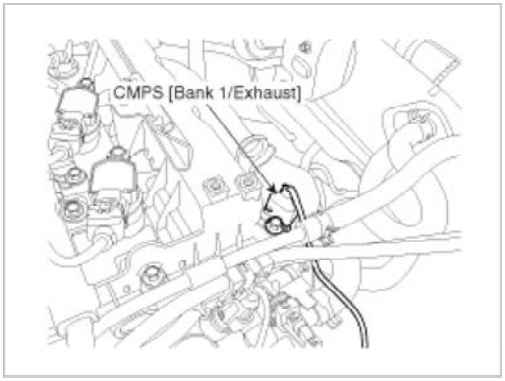	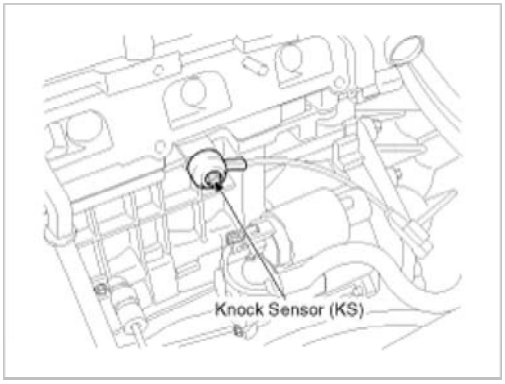
10. Heated Oxygen Sensor (HO2S) [SULEV] 11. Heated Oxygen Sensor (HO2S) [SULEV]	10. Heated Oxygen Sensor (HO2S) [Bank 1/Sensor 1] [ULEV]

mcx30.com

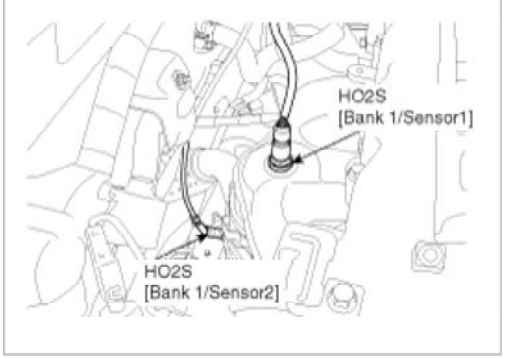

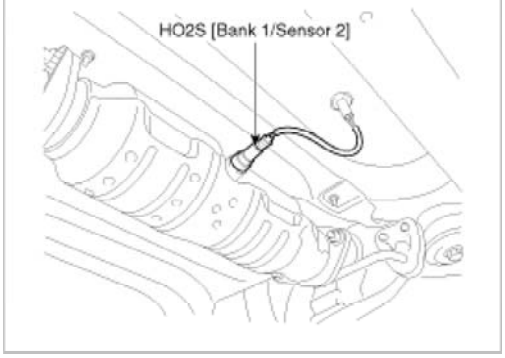

11. Heated Oxygen Sensor (HO2S) [Bank 1/Sensor 2] [ULEV]

12. Accelerator Position Sensor (APS)

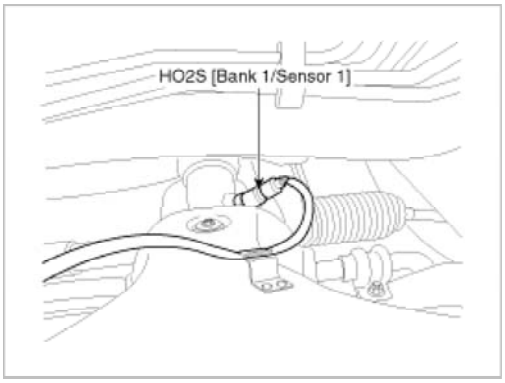

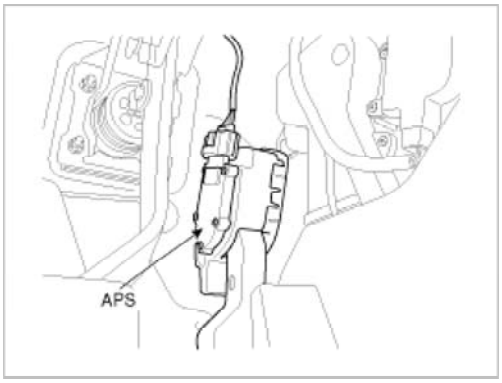

13. Fuel Tank Pressure Sensor (FTPS)

14. Fuel Level Sensor (FLS)

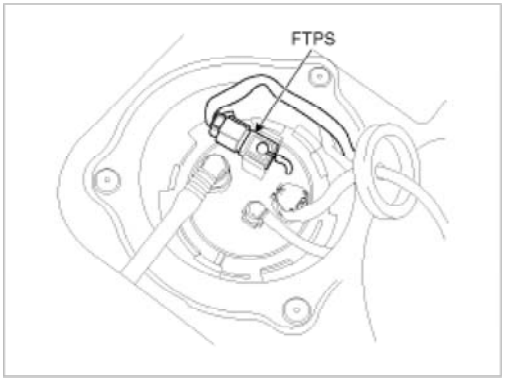

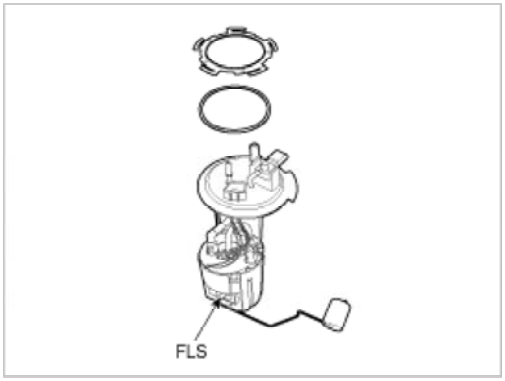

15. A/C Pressure Transducer (APT)

17. Injector
24. Ignition Coil

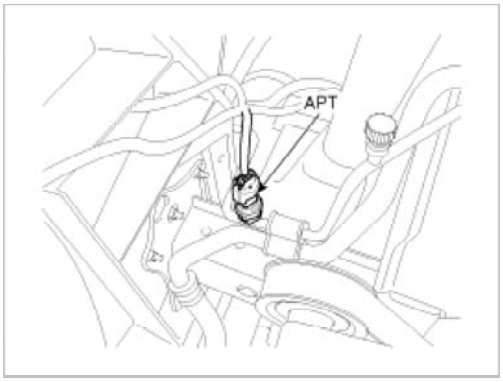

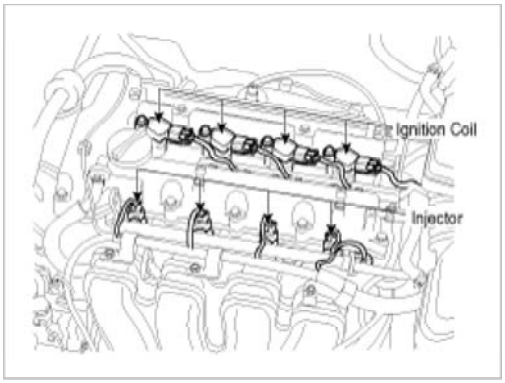

18. Purge Control Solenoid Valve (PCSV)

19. CVVT Oil Control Valve (OCV) [Bank 1 / Intake]

mcx30.com

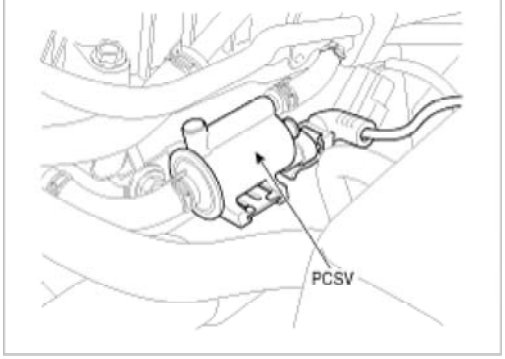	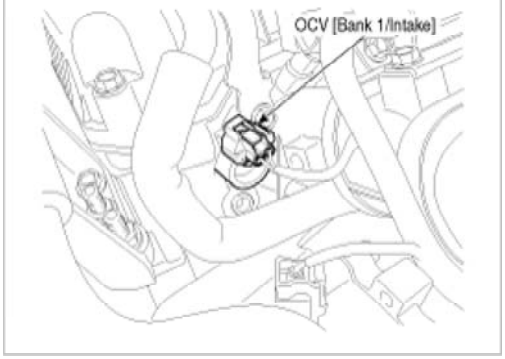
20. CVVT Oil Control Valve (OCV) [Bank 1 / Exhaust]	21. Variable Intake Solenoid (VIS) Valve
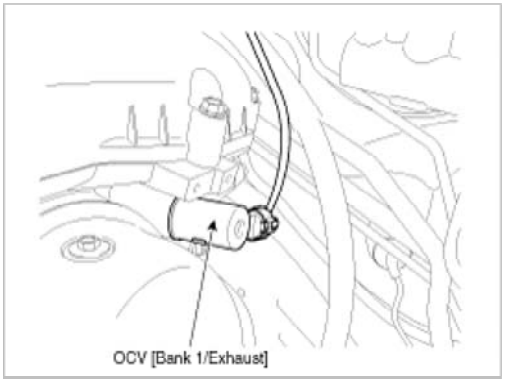	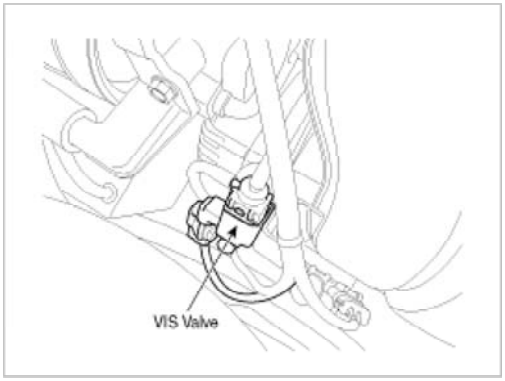
22. Variable Charge Motion Actuator (VCMA)	23. Canister Close Valve (CCV)
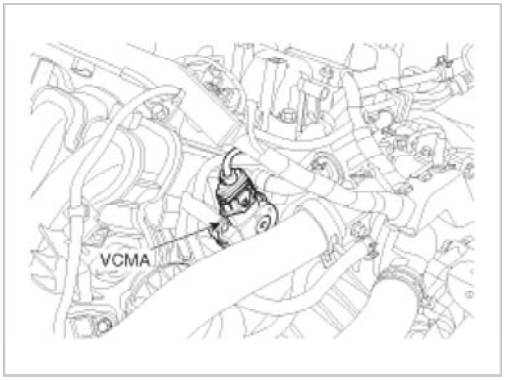	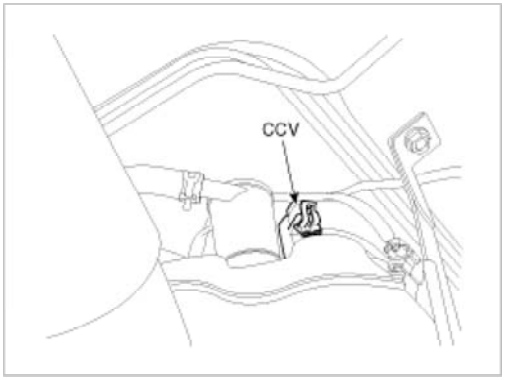
25. Main Relay 26. Fuel Pump Relay 28. Multi-Purpose Check Connector [20-Pin]	
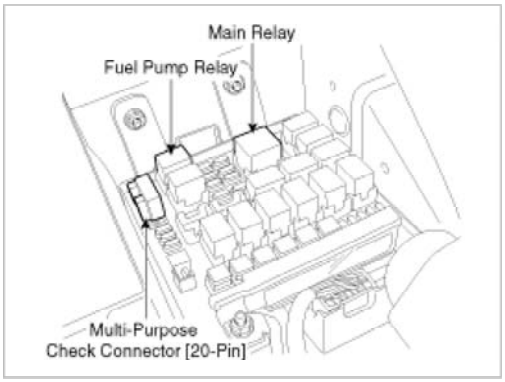	

Fuel System > Engine Control System > Engine Control Module (ECM) > Schematic Diagrams

mcx30.com

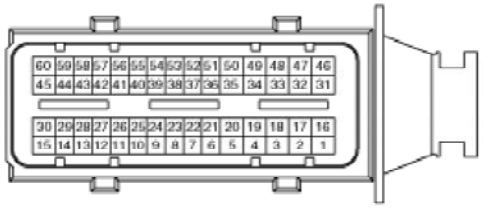

Connector [CHG-A]

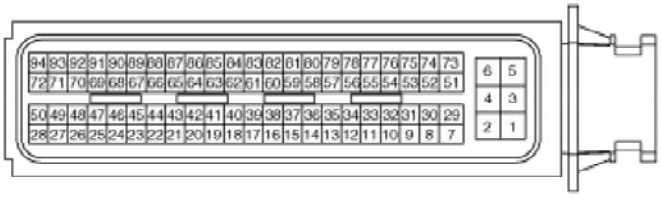

Connector [CHG-K]

ECM Terminal Function

Connector [CHG-A]

Pin No.	Description	Connected to
1	Ignition Coil (Cylinder #4) control output	Ignition Coil (Cylinder #4) [With Immobilizer]
	Ignition Coil (Cylinder #1) control output	Ignition Coil (Cylinder #1) [Without Immobilizer]
2	Shield ground	Ignition Coil (Cylinder #1,2,3,4)
3	-	
4	-	
5	-	
6	-	
7	-	
8	-	
9	-	
10	-	
11	-	
12	-	
13	Electrical load [Wiper] signal input	Wiper [Low] Relay
14	Electrical load signal input	Alternator
15	Ground	Cruise Control Switch
16	Ignition Coil (Cylinder #2) control output	Ignition Coil (Cylinder #2) [With Immobilizer]
	Ignition Coil (Cylinder #3) control output	Ignition Coil (Cylinder #3) [Without Immobilizer]
17	-	
18	-	
19	-	
20	-	
21	-	
22	-	
23	-	
24	-	
25	-	
26	-	
27	-	
28	-	
29	Brake Switch 1 signal input	Brake Switch
30	Cruise Control Switch signal input	Cruise Control Switch

mcx30.com

31		
	Ignition Coil (Cylinder #4) control output	Ignition Coil (Cylinder #4) [Without Immobilizer]
32	-	
33	-	
34	-	
35	-	
36	-	
37	-	
38	-	
39	-	
40	-	
41	-	
42	-	
43	Clutch Switch signal input	Clutch Switch
44	Brake Switch 2 signal input	Brake Switch
45	Motor [+] control output	Variable Charge Motion Actuator (VCMA)
46	Ignition Coil (Cylinder #3) control output	Ignition Coil (Cylinder #3) [With Immobilizer]
	Ignition Coil (Cylinder #2) control output	Ignition Coil (Cylinder #2) [Without Immobilizer]
47	-	
48	-	
49	-	
50	-	
51	-	
52	-	
53	-	
54	-	
55	-	
56	-	
57	-	
58	-	
59	-	
60	Motor [-] control output	Variable Charge Motion Actuator (VCMA)

Connector [CHG-K]

Pin No.	Description	Connected to
1	Power ground	Chassis Ground
2	Battery power (B+)	Ignition Switch
3	Power ground	Chassis Ground
4	Battery power (B+)	Main Relay
5	Power ground	Chassis Ground
6	Battery power (B+)	Battery
7	-	

mcx30.com

9	Fuel Level Sensor (FLS) signal input	Fuel Level Sensor (FLS)
10	-	
11	-	
12	Knock Sensor (KS) signal input	Knock Sensor (KS)
13	Sensor ground	Accelerator Position Sensor (APS) 2
14	Sensor ground	Engine Coolant Temperature Sensor (ECTS)
15	Camshaft Position Sensor (CMPS) [Bank 1/Exhaust] signal input	Camshaft Position Sensor (CMPS) [Bank 1/Exhaust]
16	-	
17	Crankshaft Position Sensor (CKPS) signal input	Crankshaft Position Sensor (CKPS)
18	Rc/Rp (Pump Cell Voltage)	Heated Oxygen Sensor [Bank 1/Sensor 1]
19	VS+ (NERNST Cell Voltage)	Heated Oxygen Sensor [Bank 1/Sensor 1]
20	VS-/IP- (Common Ground for VS, IP)	Heated Oxygen Sensor [Bank 1/Sensor 1]
21	-	
22	Sensor feedback signal input	Variable Charge Motion Actuator (VCMA)
23	Fuel consumption signal output	Trip Computer
24	-	
25	Injector (Cylinder #1) control output	Injector (Cylinder #1)
26	Injector (Cylinder #3) control output	Injector (Cylinder #3)
27	Injector (Cylinder #4) control output	Injector (Cylinder #4)
28	Injector (Cylinder #2) control output	Injector (Cylinder #2)
29	-	
30	Sensor power (+5V)	Manifold Absolute Pressure Sensor (MAPS)
31	Manifold Absolute Pressure Sensor (MAPS) signal input	Manifold Absolute Pressure Sensor (MAPS)
32	Throttle Position Sensor (TPS) 2 signal input	Throttle Position Sensor (TPS) 2
33	Engine Coolant Temperature Sensor (ECTS) signal input	Engine Coolant Temperature Sensor (ECTS)
34	Sensor ground	Knock Sensor (KS)
35	Accelerator Position Sensor (APS) 2 signal input	Accelerator Position Sensor (APS) 2
36	Sensor power (+5V)	Accelerator Position Sensor (APS) 2
37	Sensor ground	Camshaft Position Sensor (CMPS) [Bank 1/Exhaust]
38	-	
39	Sensor ground	Crankshaft Position Sensor (CKPS)
40	Vehicle speed signal input	ABS/ESP Control Unit
41	-	
42	Rc (Compensative Resistance)	Heated Oxygen Sensor [Bank 1/Sensor 1]
43	Sensor power (+5V)	A/C Pressure Transducer (APT), Fuel Tank Pressure Sensor (FTPS), Variable Charge Motion Actuator (VCMA)
44	Sensor ground	Variable Charge Motion Actuator (VCMA)
45	-	
46	Alternator (COM)	Alternator

mcx30.com

48	-	
49	-	
50	Variable Intake Solenoid (VIS) Valve control output	Variable Intake Solenoid (VIS) Valve
51	Battery power (B+)	Main Relay
52	Fuel Tank Pressure Sensor (FTPS) signal input	Fuel Tank Pressure Sensor (FTPS)
53	Intake Air Temperature Sensor (IATS) signal input	Intake Air Temperature Sensor (IATS)
54	A/C Pressure Transducer (APT) signal input	A/C Pressure Transducer (APT)
55	-	
56	-	
57	Sensor ground	A/C Pressure Transducer (APT)
58	-	
59	Sensor ground	Throttle Position Sensor (TPS) 1,2
60	Sensor power (+5V)	Accelerator Position Sensor (APS) 1
61	Sensor ground	Accelerator Position Sensor (APS) 1
62	Camshaft Position Sensor (CMPS) [Bank 1/Intake] signal input	Camshaft Position Sensor (CMPS) [Bank 1/Intake]
63	Sensor power (+5V)	Throttle Position Sensor (TPS) 1,2
64	Main Relay control output	Main Relay
65	Cooling Fan Relay [Low] control output	Cooling Fan Relay [Low]
66	CVVT Oil Control (OCV) Valve [Bank 1/Intake] control output	CVVT Oil Control Valve (OCV) [Bank 1/Intake]
67	Purge Control Solenoid Valve (PCSV) control output	Purge Control Solenoid Valve (PCSV)
68	CVVT Oil Control (OCV) Valve [Bank 1/Exhaust] control output	CVVT Oil Control Valve (OCV) [Bank 1/Exhaust]
69	Immobilizer Lamp control output	Immobilizer Lamp [Without Button Engine Start System]
70	Fuel Pump Relay control output	Fuel Pump Relay
71	ETC Motor [+] control output	ETC Motor
72	ETC Motor [-] control output	ETC Motor
73	Sensor ground	Fuel Tank Pressure Sensor (FTPS)
74	Sensor ground	Manifold Absolute Pressure Sensor (MAPS)
75	Immobilizer communication line	Smart key control module [With Button Engine Start System]
		Immobilizer Control [Without Button Engine Start System]
76	LIN communication signal input	Battery Sensor
77	CAN [High]	Other control module, Data Link Connector (DLC),
78	CAN [Low]	Other control module, Data Link Connector (DLC),
79	-	
80	Throttle Position Sensor (TPS) 1 signal input	Throttle Position Sensor (TPS) 1
81	-	
82	Accelerator Position Sensor (APS) 1 signal input	Accelerator Position Sensor (APS) 1
83	Sensor ground	Camshaft Position Sensor (CMPS) [Bank 1/Intake]
84	Heated Oxygen Sensor (HO2S) [Bank 1/Sensor 2] signal input	Heated Oxygen Sensor (HO2S) [Bank 1/Sensor 2]

mcx30.com

86	Engine speed signal output	Power Distribution Module (PDM)
87	A/C Compressor Relay control output	A/C Compressor Relay
88	Cooling Fan Relay [High] control output	Cooling Fan Relay [High]
89	-	
90	-	
91	Canister Close Valve (CCV) control output	Canister Close Valve (CCV)
92	Malfunction Indicator Lamp (MIL) control output	Malfunction Indicator Lamp (MIL)
93	Heated Oxygen Sensor (HO2S) [Bank 1/Sensor 1] Heater control output	Heated Oxygen Sensor (HO2S) [Bank 1/Sensor 1]
94	Heated Oxygen Sensor (HO2S) [Bank 1/Sensor 2] Heater control output	Heated Oxygen Sensor (HO2S) [Bank 1/Sensor 2]

ECM Terminal Input/ Output signal

Connector [CHG-A]

Pin No.	Description	Condition	Type	Level	Test Result
1	Ignition Coil (Cylinder #4) control output [With Immobilizer]	Idle	Pulse	1st Voltage: 300~400V	416V
				ON Voltage: Max. 2.0V	1.4V
	Ignition Coil (Cylinder #1) control output [Without Immobilizer]			Frequency	5.2Hz
				Dwell Time	2.78ms
2	Shield	Idle	DC	Max. 50mV	16.8mV
3	-				
4	-				
5	-				
6	-				
7	-				
8	-				
9	-				
10	-				
11	-				
12	-				
13	Electrical load [Wiper] signal input				
14	Alternator (FR)	Idle	Pulse	HI: Battery Voltage	13.4V
				LO: Max 1.5V	40 mV
15	Ground	Idle	DC	Max. 50 mV	
16	Ignition Coil (Cylinder #2) control output [With Immobilizer]	Idle	Pulse	1st Voltage: 300~400V	416V
				ON Voltage: Max. 2.0V	1.3V
	Ignition Coil (Cylinder #3) control output [Without Immobilizer]			Frequency	5.2Hz
				Dwell Time	2.73ms
17	-				
18	-				
19	-				
20	-				

mcx30.com

22	-				
23	-				
24	-				
25	-				
26	-				
27	-				
28	-				
29	Brake Switch 1 signal input	Brake ON	DC	Battery Voltage	
		Brake OFF		Max. 0.5 V	
30	Cruise control Switch signal input	Cruise ON	DC	Battery Voltage	
		Cruise OFF		4.3 ~ 4.7V	
31	Ignition Coil (Cylinder #1) control output [With Immobilizer]	Idle	Pulse	1st Voltage: 300~400V	408V
				ON Voltage: Max. 2.0V	1.6V
	Ignition Coil (Cylinder #4) control output [Without Immobilizer]			Frequency	5.2Hz
				Dwell Time	2.74ms
32	-				
33	-				
34	-				
35	-				
36	-				
37	-				
38	-				
39	-				
40	-				
41	-				
42	-				
43	Clutch Switch signal input	Release	DC	Max. 0.5V	
		Push		Battery Voltage	
44	Brake Switch 2 signal input	Push	DC	Max. 0.5V	
		Normal		Battery Voltage	
45	Motor [+] control output	Engine Run	PWM	High: Battery Voltage	
				Low: Max. 0.5V	
				Duty: 50%	
46	Ignition Coil (Cylinder #3) control output [With Immobilizer]	Idle	Pulse	1st Voltage: 300~400V	410V
				ON Voltage: Max. 2.0V	1.5V
	Ignition Coil (Cylinder #2) control output [Without Immobilizer]			Frequency	5.2Hz
				Dwell Time	2.78ms
47	-				
48	-				
49	-				
50	-				
51	-				

mcx30.com

53	-				
54	-				
55	-				
56	-				
57	-				
58	Power Steering Pressure Switch signal input	S/W ON	DC	Max. 0.5V	
		S/W OFF		Battery Voltage	
59	-				
60	Motor [-] control output	Engine Run	PWM	High: Battery Voltage	
				Low: Max. 0.5V	
				Duty: 50%	

Connector [CHG-K]

Pin No.	Description	Condition	Type	Level	Test Result
1	Power ground	Idle	DC	Max. 50mV	
2	Battery power (B+)	IG OFF	DC	Max. 0.5V	10.2mV
		IG ON		Battery Voltage	12.02V
3	Power ground	Idle	DC	Max. 50mV	2.8mV
4	Battery power (B+)	IG OFF	DC	Max. 1.0V	3.1mV
		IG ON		Battery Voltage	12.1V
5	Power ground	Idle	DC	Max. 50mV	1.8mV
6	Battery power (B+)	Always (Without Ignition key)	Current	Below 2.0 mA	0.4 mA
			DC	Battery Voltage	12.88V
7	-				
8	Fuel Level Sensor (FLS) [MIDDLE] signal input	IG ON	Analog	0.88 ~ 8.45V	
9	Fuel Level Sensor (FLS) [TOTAL] signal input	IG ON	Analog	0.88 ~ 8.45V	
10	-				
11	-				
12	Knock Sensor (KS) signal input	Knocking	Variable Frequency	-0.3 ~ 0.3V	
		Normal		0 V	
13	Sensor ground	Idle	DC	Max. 50mV	30mV
14	Sensor ground	Idle	DC	Max. 50mV	12.4mV
15	Camshaft Position Sensor (CMPS) [Bank 1/Exhaust] signal input	Idle	Pulse	HI: Vcc or Battery Voltage	5.0V
				LO: Max. 0.5V	0.2V
				FREQ: 5.36Hz	
16	Sensor ground	Idle	DC	Max. 50mV	29.0mV
17	Crankshaft Position Sensor (CKPS) signal input	Idle	Pulse	HI: Vcc or Battery Voltage	5.00V
				LO: Max. 0.5V	40mV
				FREQ: 600Hz	
				Normal: 450±50 mV	

mcx30.com

18	Rc/Rp (Pump Cell Voltage)	Idle	Analog	Lean: Min. Normal-150 mV	
19	VS+ (NERNST Cell Voltage)	Idle	Analog	Normal: 450±50 mV Rich: Max. Normal+150 mV Lean: Min. Normal-150 mV	
20	VS-/IP- (Common Ground for VS, IP)	Idle	Analog	Reference for V_IP, V_N	
21	Sensor feedback signal input	Idle	DC	0.5 ~ 4.5V	
22	-				
23	Fuel consumption signal output	Idle	Pulse	HI: Battery Voltage	13.7V
				LO: Max. 0.5V	0V
				Frequency	3.33Hz
				Pulse Width	500μs
24	-				
25	Injector (Cylinder #1) control output	Idle	Pulse	HI: Battery Voltage	13.8V
				LO: Max. 1.0V	200mV
				Vpeak: Max. 80V	54.1V
				Frequency	5.21Hz
				Dwell Time	2.74ms
26	Injector (Cylinder #3) control output	Idle	Pulse	HI: Battery Voltage	13.9V
				LO: Max. 1.0V	170mV
				Vpeak: Max. 80V	53.9V
				Frequency	5.18Hz
				Dwell Time	2.73ms
27	Injector (Cylinder #4) control output	Idle	Pulse	HI: Battery Voltage	14V
				LO: Max. 1.0V	160mV
				Vpeak: Max. 80V	54.3V
				Frequency	5.24Hz
				Dwell Time	2.70ms
28	Injector (Cylinder #2) control output	Idle	Pulse	HI: Battery Voltage	14.1V
				LO: Max. 1.0V	160mV
				Vpeak: Max. 80V	53.9V
				Frequency: 5.21Hz	5.21Hz
				Dwell Time: 2.73ms	2.74ms
29	-				
30	Sensor power (+5V)	IG OFF	DC	Max. 0.5V	0mV
		IG ON		4.9 ~ 5.1V	4.98V
31	Manifold Absolute Pressure Sensor (MAPS) signal input	Idle	Analog	0.8 ~ 1.6V	1.37V
32	Throttle Position Sensor (TPS) 2 signal input	C.T	Analog	4.2 ~ 5.0V	4.52V
		W.O.T		3.3 ~ 3.8V	3.68V
33	Engine Coolant Temperature Sensor (ECTS) signal input	Idle	Analog	0.5 ~ 4.5V	1.02V
34	Sensor ground	Idle	DC	Max. 50mV	8mV
	Accelerator Position Sensor (APS) 2	C.T		Max. 1.0V	0.4V

mcx30.com

36	Sensor power (+5V)	IG OFF	DC	Max. 0.5V	5mV
		IG ON		4.9 ~ 5.1V	5.02V
37	Sensor ground	Idle	DC	Max. 50mV	11mV
38	-				
39	Sensor ground	Idle	DC	Max. 50mV	11mV
40	Vehicle speed signal input	Vehicle Run	Pulse	HI: Min. 4.5V	5.0V
				LO: Max. 0.5V	0V
				Frequency	46.9Hz at Idle
				Duty(-)	50.4% at Idle
41	-				
42	Rc (Compensative Resistance)	Idle	Analog	|Rc-Rc/Rp| <±0.1V	
43	Sensor power (+5V)	IG OFF	DC	Max. 0.5V	
		IG ON		4.9 ~ 5.1V	
44	Sensor ground	Always	DC	0 ~ 0.5V	5mV
45	-				
46	Alternator (COM)				
47	-				
48	-				
49	-				
50	Variable Intake Solenoid (VIS) Valve control output	Active	DC	Max. 1.0V	316mV
		Inactive		Battery Voltage	14.0V
51	Battery power (B+)	IG OFF	DC	Max. 1.0V	3.1mV
		IG ON		Battery Voltage	12.3V
52	Fuel Tank Pressure Sensor (FTPS) signal input	Idle	Analog	0.4 ~ 4.6V	
53	Intake Air Temperature Sensor (IATS) signal input	Idle	Analog	0 ~ 5.0V	2.55V
54	A/C Pressure Transducer (APT) signal input	Idle	DC	0.4 ~ 4.6V	A/C OFF: 1.29V A/C ON: 2.01V
55	-				
56	-				
57	Sensor ground	Idle	DC	Max. 50mV	11mV
58	-				
59	Sensor ground	Idle	DC	Max. 50mV	6mV
60	Sensor power (+5V)	IG OFF	DC	Max. 0.5V	10mV
		IG ON		4.9 ~ 5.1V	5.02V
61	Sensor ground	Idle	DC	Max. 50mV	30mV
62	Camshaft Position Sensor (CMPS) [Bank 1/Intake] signal input	Idle	Pulse	HI: Vcc or Battery Voltage	5.0V
				LO: Max. 0.5V	0.2V
				Frequency	5.2Hz
63	Sensor power (+5V)	IG OFF	DC	Max. 0.5V	0V

mcx30.com

64	Main Relay control output	Relay OFF	DC	Battery Voltage	12.3V
		Relay ON		Max. 1.0V	730mV
65	Cooling Fan Relay [Low] control output	A/C ON	Pulse	HI: Battery Voltage	10.4V
				LO: 0 ~ 0.5V	60mV
66	CVVT Oil control (OCV) Valve [Bank 1/Intake] control output	Idle	Pulse	HI: Battery Voltage	15.0V
				LO: Max. 1.0V	120mV
				Frequency	300Hz
				Duty(+)	84.70%
67	Purge control Solenoid Valve (PCSV) control output	Inactive Active	Pulse	HI: Battery Voltage	14.3V
				LO: Max. 1.0V	80mV
				Vpeak: Max. 70V	57.0V
				Frequency	16Hz
68	CVVT Oil control (OCV) Valve [Bank 1/Exhaust] control output	Idle	Pulse	HI: Battery Voltage	13.5V
				LO: Max. 1.0V	100mV
				Vpeak: Max.70V	13.5V
				Frequency	300Hz
69	Immobilizer Lamp control output	Lamp OFF	DC	HI: Battery Voltage	13.2V
		Lamp ON		LO: Max . 2.0V	40mV
70	Fuel Pump Relay control output	Relay OFF	DC	Battery Voltage	12.8V
		Relay ON		Max. 1.0V	40mV
71	ETC Motor [+] control output	Idle	Pulse	HI: Battery Voltage	13.4V
				LO: Max . 1.0V	0V
72	ETC Motor [-] control output	Idle	Pulse	HI: Battery Voltage	13.3V
				LO: Max . 1.0V	0V
73	Sensor ground	Idle	DC	Max. 50mV	
74	Sensor ground	Idle	DC	Max. 50mV	7mV
75	Immobilizer communication line	During communicating	Pulse	HI: Min. 8.5V	11.8V
				LO: Max. 3.5V	1.0V
76	LIN communication signal input				
77	CAN [High]	Recessive	Pulse	2.0 ~ 3.0V	2.58V
		Dominant		2.75~4.5V	3.54V
78	CAN [Low]	Recessive	Pulse	2.0 ~ 3.0V	2.64V
		Dominant		0.5~2.25V	1.52V
79	-				
80	Throttle Position Sensor (TPS) 1 signal input	C.T	Analog	0.3 ~ 0.9 V	0.65V
		W.O.T		1.5 ~ 3.0 V	1.63V
81	-				
82	Accelerator Position Sensor (APS) 1 signal input	C.T	Analog	Max. 1.0V	0.8V
		W.O.T		Min. 4.0V	4.0V
83	Sensor ground	Idle	DC	Max. 50 mV	12mV
84	Heated Oxygen Sensor (HO2S) [Bank 1/Sensor 2] signal input	Idle	DC	Rich: 0.6 ~ 1.0V	74 mV
				Lean: Max. 0.4V	70mV

mcx30.com

86	Engine speed signal output	Idle	Pulse	HI: Battery Voltage	14.0V
				LO: Max. 0.5V	60mV
				Frequency: 20~26Hz	21Hz
				Duty(+)	50%
87	A/C Compressor Relay control output	A/C OFF	DC	Battery Voltage	14.3 V
		A/C ON		Max. 1.0V	102mV
88	Cooling Fan Relay [High] control output	Relay OFF	DC	Battery Voltage	
		Relay ON		Max. 1.0V	
89	-				
90	-				
91	Canister Close Valve (CCV) control output	Active Inactive	Pulse	High: Battery Voltage	13.0V
				Low: Max. 1.0V	20mV
				V peak: Max. 70V	57.7V
92	Malfunction Indicator Lamp (MIL) control output	Lamp OFF	DC	Battery Voltage	13.8V
		Lamp ON		Max. 1.0V	54mV
93	Heated Oxygen Sensor (HO2S) [Bank 1/Sensor 1] Heater control output	Engine Run	Pulse	HI: Battery Voltage	14.4V
				LO: Max. 1.0V	0.36V
				Frequency	10.0Hz
				Duty(+)	58.30%
94	Heated Oxygen Sensor (HO2S) [Bank 1/Sensor 2] Heater control output	Engine Run	Pulse	HI: Battery Voltage	14.0V
				LO: Max. 1.0V	0.31V
				Frequency	7.68Hz
				Duty(+)	53.9%

Circuit Diagram

mcx30.com

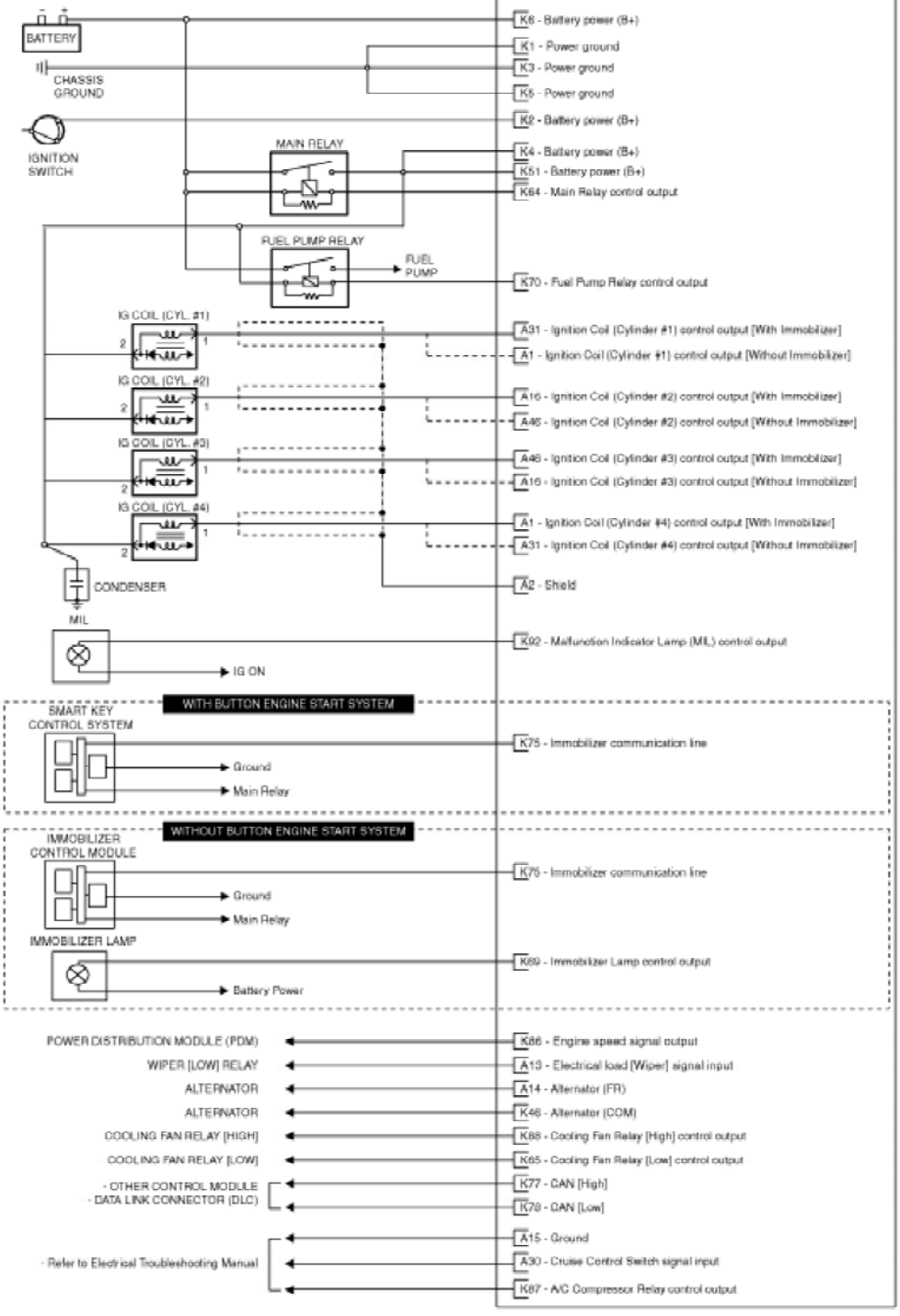
BATTERY
CHASSIS GROUND
IGNITION SWITCH
MAIN RELAY
FUEL PUMP RELAY
FUEL PUMP
IG COIL (CYL. #1)
IG COIL (CYL. #2)
IG COIL (CYL. #3)
IG COIL (CYL. #4)
CONDENSER
MIL
IG ON
WITH BUTTON ENGINE START SYSTEM
SMART KEY CONTROL SYSTEM
Ground
Main Relay
WITHOUT BUTTON ENGINE START SYSTEM
IMMOBILIZER CONTROL MODULE
Ground
Main Relay
IMMOBILIZER LAMP
Battery Power
K6 - Battery power (B+)
K1 - Power ground
K3 - Power ground
K5 - Power ground
K2 - Battery power (B+)
K4 - Battery power (B+)
K51 - Battery power (B+)
K64 - Main Relay control output
K70 - Fuel Pump Relay control output
A31 - Ignition Coil (Cylinder #1) control output [With Immobilizer]
A1 - Ignition Coil (Cylinder #1) control output [Without Immobilizer]
A16 - Ignition Coil (Cylinder #2) control output [With Immobilizer]
A46 - Ignition Coil (Cylinder #2) control output [Without Immobilizer]
A46 - Ignition Coil (Cylinder #3) control output [With Immobilizer]
A16 - Ignition Coil (Cylinder #3) control output [Without Immobilizer]
A1 - Ignition Coil (Cylinder #4) control output [With Immobilizer]
A31 - Ignition Coil (Cylinder #4) control output [Without Immobilizer]
A2 - Shield
K92 - Malfunction Indicator Lamp (MIL) control output
K75 - Immobilizer communication line
K76 - Immobilizer communication line
K69 - Immobilizer Lamp control output
POWER DISTRIBUTION MODULE (PDM)
WIPER [LOW] RELAY
ALTERNATOR
ALTERNATOR
COOLING FAN RELAY [HIGH]
COOLING FAN RELAY [LOW]
- OTHER CONTROL MODULE
- DATA LINK CONNECTOR (DLC)
- Refer to Electrical Troubleshooting Manual
K66 - Engine speed signal output
A13 - Electrical load [Wiper] signal input
A14 - Alternator (FR)
K46 - Alternator (COM)
K68 - Cooling Fan Relay [High] control output
K65 - Cooling Fan Relay [Low] control output
K77 - CAN [High]
K78 - CAN [Low]
A15 - Ground
A30 - Cruise Control Switch signal input
K87 - A/C Compressor Relay control output

mcx30.com

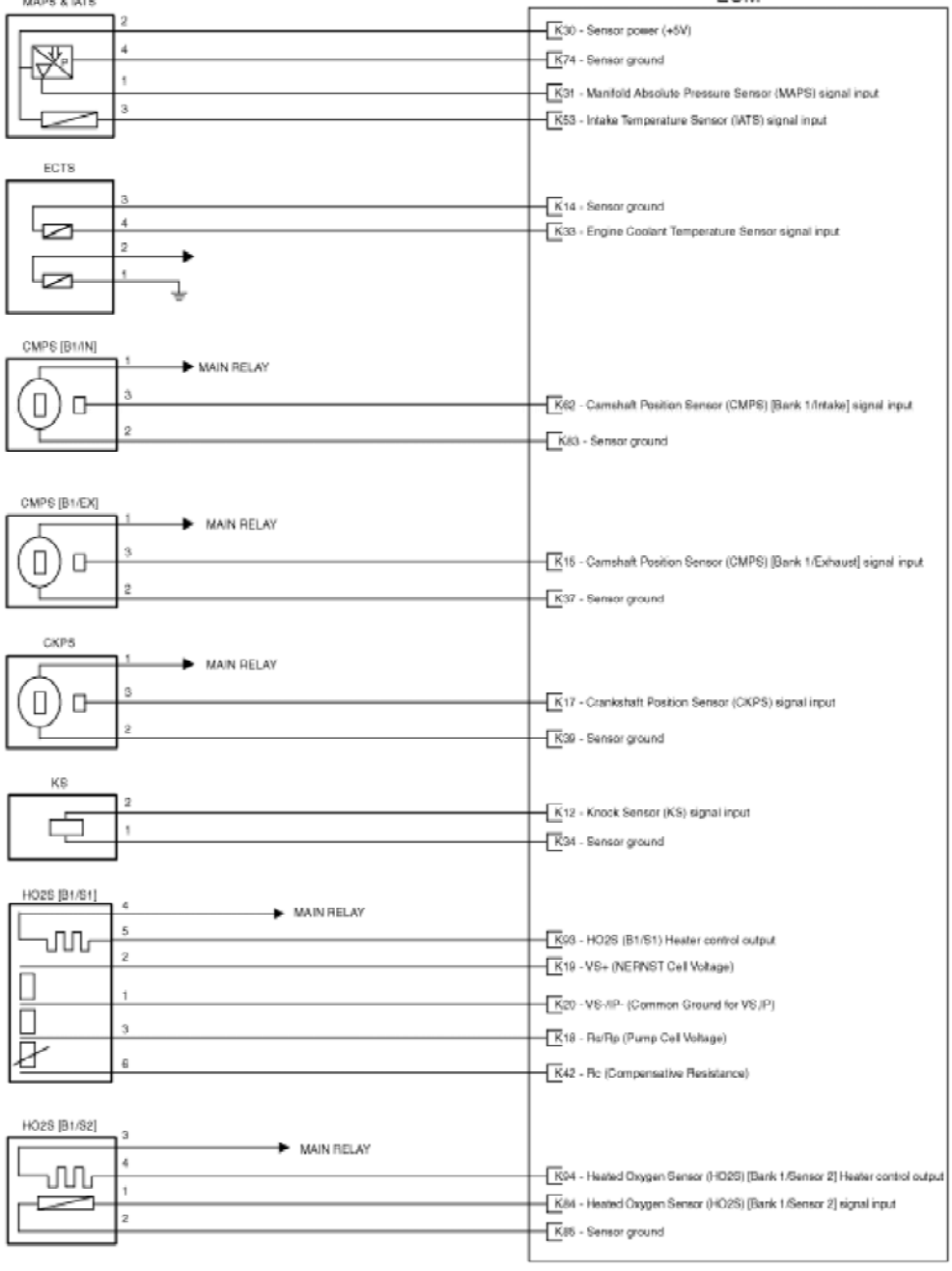
MAPS & IATS
2
4
1
3
K30 - Sensor power (+5V)
K74 - Sensor ground
K31 - Manifold Absolute Pressure Sensor (MAPS) signal input
K53 - Intake Temperature Sensor (IATS) signal input
ECTS
3
4
2
1
K14 - Sensor ground
K33 - Engine Coolant Temperature Sensor signal input
CMPS [B1/IN]
1
MAIN RELAY
3
2
K62 - Camshaft Position Sensor (CMPS) [Bank 1/Intake] signal input
K63 - Sensor ground
CMPS [B1/EX]
1
MAIN RELAY
3
2
K15 - Camshaft Position Sensor (CMPS) [Bank 1/Exhaust] signal input
K37 - Sensor ground
CKPS
1
MAIN RELAY
3
2
K17 - Crankshaft Position Sensor (CKPS) signal input
K39 - Sensor ground
KS
2
1
K12 - Knock Sensor (KS) signal input
K34 - Sensor ground
HO2S [B1/S1]
4
MAIN RELAY
5
2
1
3
6
K93 - HO2S (B1/S1) Heater control output
K19 - VS+ (NERNST Cell Voltage)
K20 - VS-/IP- (Common Ground for VS/IP)
K18 - Rs/Rp (Pump Cell Voltage)
K42 - Rc (Compensative Resistance)
HO2S [B1/S2]
3
MAIN RELAY
4
1
2
K94 - Heated Oxygen Sensor (HO2S) [Bank 1/Sensor 2] Heater control output
K84 - Heated Oxygen Sensor (HO2S) [Bank 1/Sensor 2] signal input
K85 - Sensor ground

mcx30.com

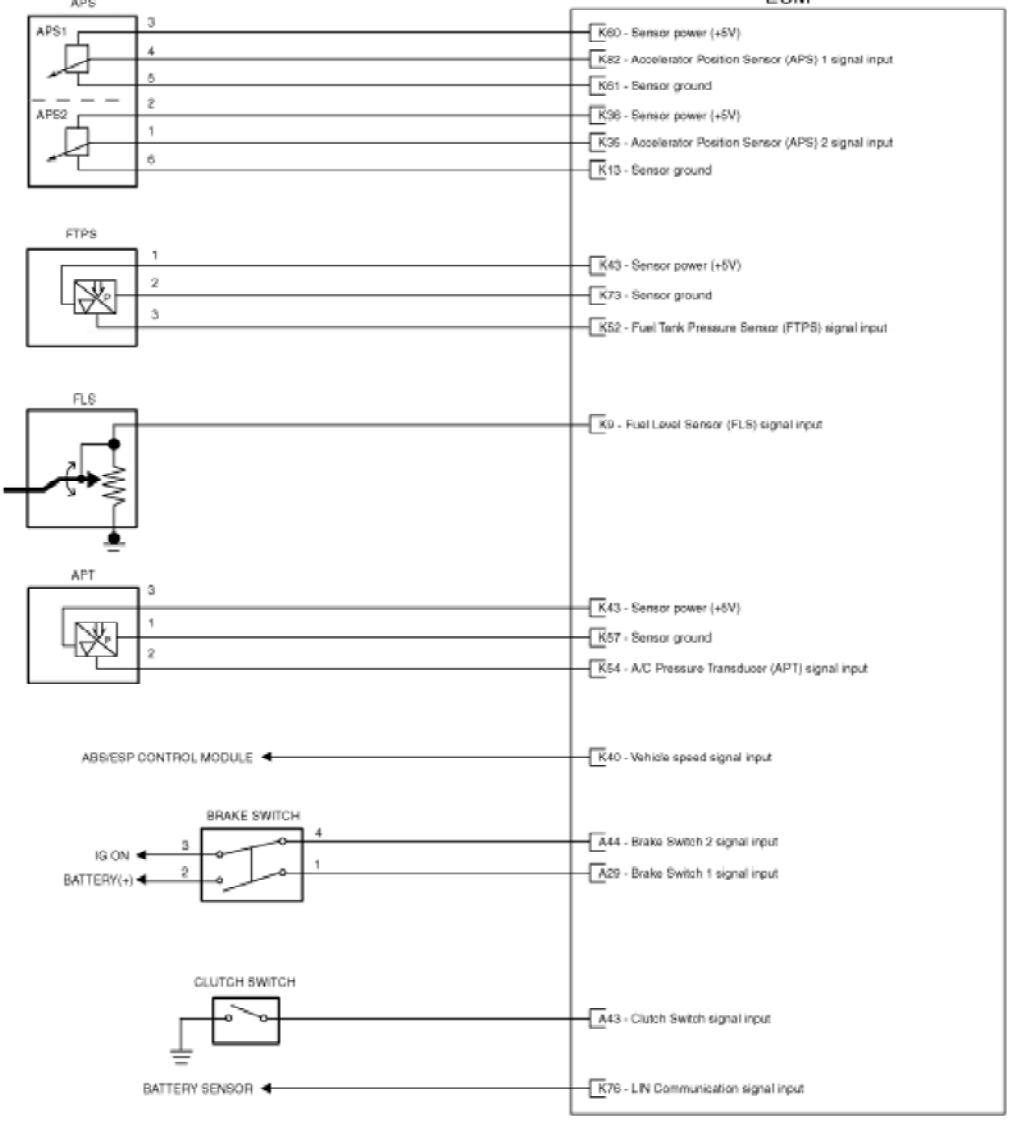
APS
APS1
APS2
3
4
5
2
1
6
K60 - Sensor power (+5V)
K62 - Accelerator Position Sensor (APS) 1 signal input
K61 - Sensor ground
K36 - Sensor power (+5V)
K35 - Accelerator Position Sensor (APS) 2 signal input
K13 - Sensor ground
FTPS
1
2
3
K43 - Sensor power (+5V)
K73 - Sensor ground
K52 - Fuel Tank Pressure Sensor (FTPS) signal input
FLS
K9 - Fuel Level Sensor (FLS) signal input
APT
3
1
2
K43 - Sensor power (+5V)
K57 - Sensor ground
K54 - A/C Pressure Transducer (APT) signal input
ABS/ESP CONTROL MODULE
K40 - Vehicle speed signal input
BRAKE SWITCH
IG ON
BATTERY(+)
3
2
4
1
A44 - Brake Switch 2 signal input
A29 - Brake Switch 1 signal input
CLUTCH SWITCH
A43 - Clutch Switch signal input
BATTERY SENSOR
K76 - LIN Communication signal input

mcx30.com

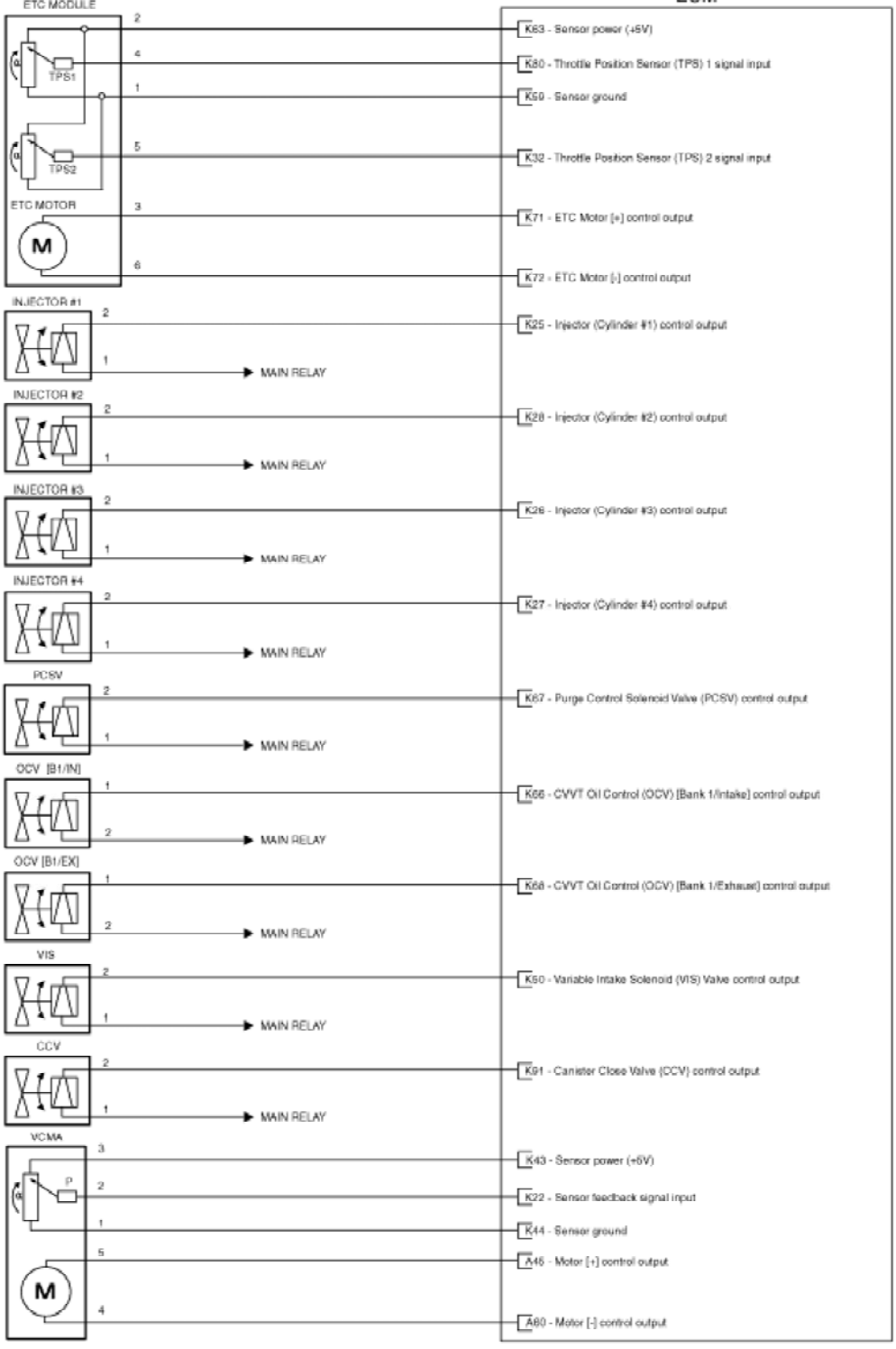

Fuel System > Engine Control System > Engine Control Module (ECM) > Repair procedures

Removal

NOTE

In the case of the vehicle equipped with immobilizer or button engine start system, perform "Key Teaching" procedure together (Refer to "Immobilizer" or "Button Engine Start System in BE group).

1. Turn ignition switch OFF and disconnect the negative (-) battery cable.
2. Disconnect the ECM Connector (A).

mcx30.com

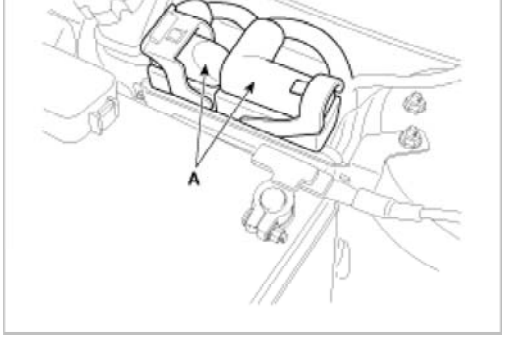

3. Remove the battery (Refer to "Charging System" in EE group).
4. Remove the mounting bolts (A) and a nut (B), and then remove the ECM (C).

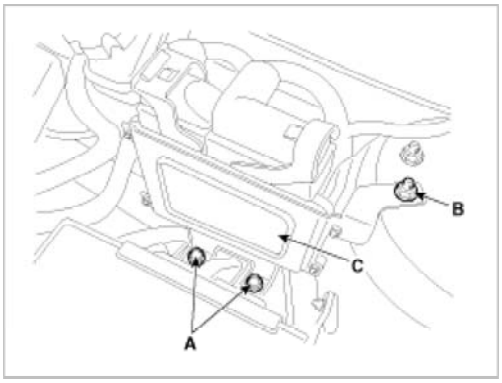

Installation

NOTE

In the case of the vehicle equipped with immobilizer or button engine start system, perform "Key Teaching" procedure together (Refer to "Immobilizer" or "Button Engine Start System in BE group).

1. Installation is reverse of removal.

ECM installation bolt:
7.8 ~ 11.8 N.m (0.8 ~ 1.2 kgf.m, 5.8 ~ 8.7 lb-ft)

ECM Problem Inspection Procedure

1. TEST ECM GROUND CIRCUIT: Measure resistance between ECM and chassis ground using the backside of ECM harness connector as ECM side check point. If the problem is found, repair it.

Specification: Below 1Ω

2. TEST ECM CONNECTOR: Disconnect the ECM connector and visually check the ground terminals on ECM side and harness side for bent pins or poor contact pressure. If the problem is found, repair it.
3. If problem is not found in Step 1 and 2, the ECM could be faulty. If so, make sure there were no DTC's before swapping the ECM with a new one, and then check the vehicle again. If DTC's were found, examine this first before swapping ECM.
4. RE-TEST THE ORIGINAL ECM: Install the original ECM (may be broken) into a known-good vehicle and check the vehicle. If the problem occurs again, replace the original ECM with a new one. If problem does not occur, this is intermittent problem (Refer to “Intermittent Problem Inspection Procedure” in Basic Inspection Procedure).

VIN Programming Procedure

VIN (Vehicle Identification Number) is a number that has the vehicle's information (Maker, Vehicle Type, Vehicle Line/Series, Body Type, Engine Type, Transmission Type, Model Year, Plant Location and so forth. For more information, please refer to the group "GI" in this SERVICE MANUAL). When replacing an ECM, the VIN must be programmed in the

mcx30.com

CAUTION

The programmed VIN cannot be changed. When writing the VIN, confirm the VIN carefully

1. Select "VIN Writing" function in "Vehicle S/W Management".
2. Select "Write VIN" in "ID Register".

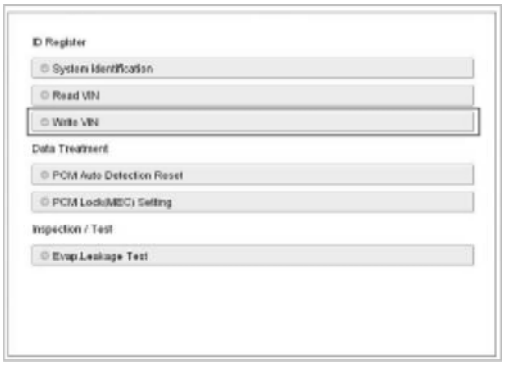

3. Input the VIN.

WARNING

Before inputing the VIN, confirm the VIN again because the programmed VIN cannot be changed.

4. Turn the ignition switch OFF, then back ON.

Fuel System > Engine Control System > ETC (Electronic Throttle Control) System > Description and Operation

Description

The Electronic Throttle Control (ETC) System consists of a throttle body with an integrated control motor and throttle position sensor (TPS). Instead of the traditional throttle cable, an Accelerator Position Sensor (APS) is used to receive driver input. The ECM uses the APS signal to calculate the target throttle angle; the position of the throttle is then adjusted via ECM control of the ETC motor. The TPS signal is used to provide feedback regarding throttle position to the ECM. Using ETC, precise control over throttle position is possible; the need for external cruise control modules/cables is eliminated.

mcx30.com

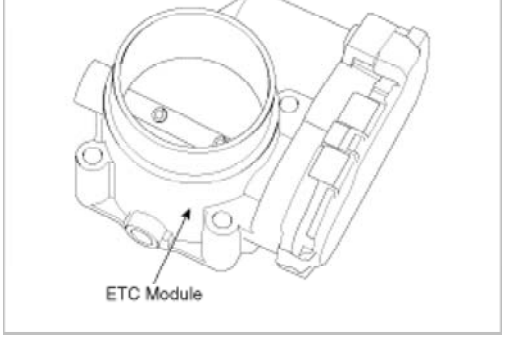

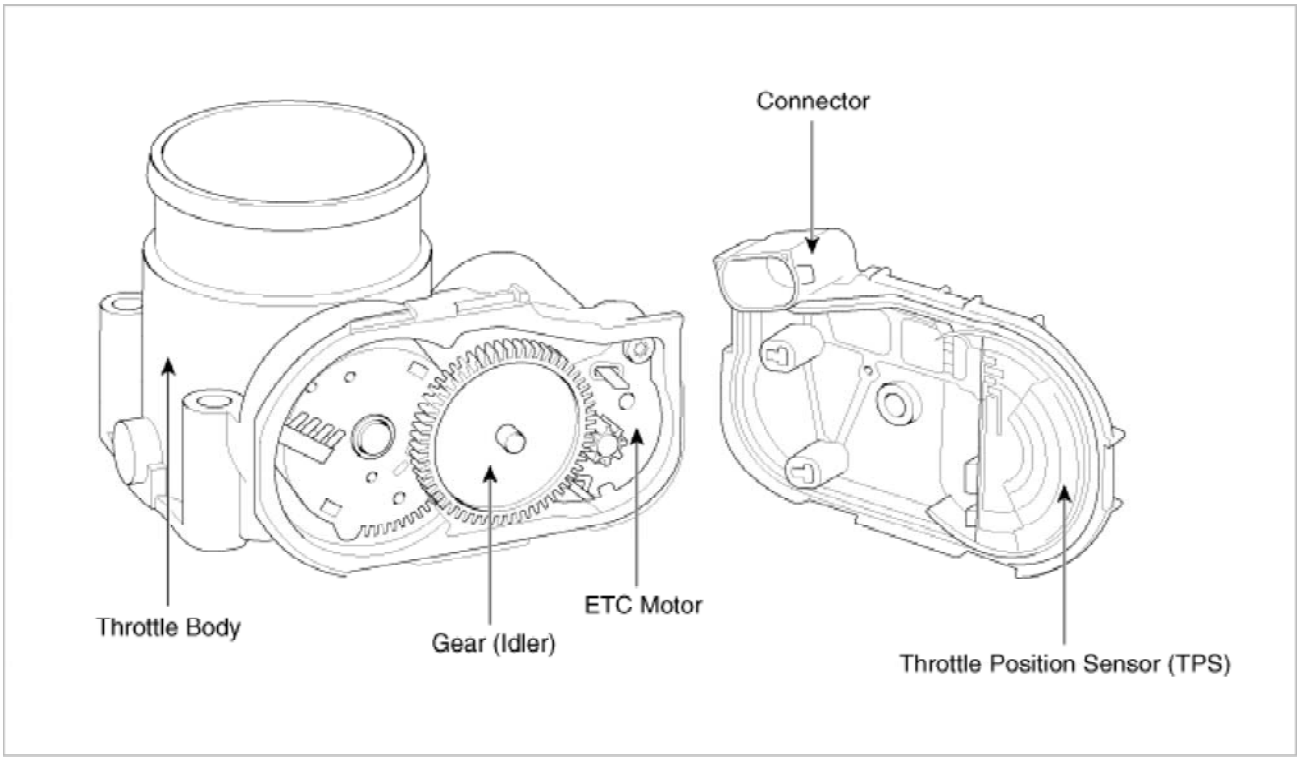

Schematic Diagram

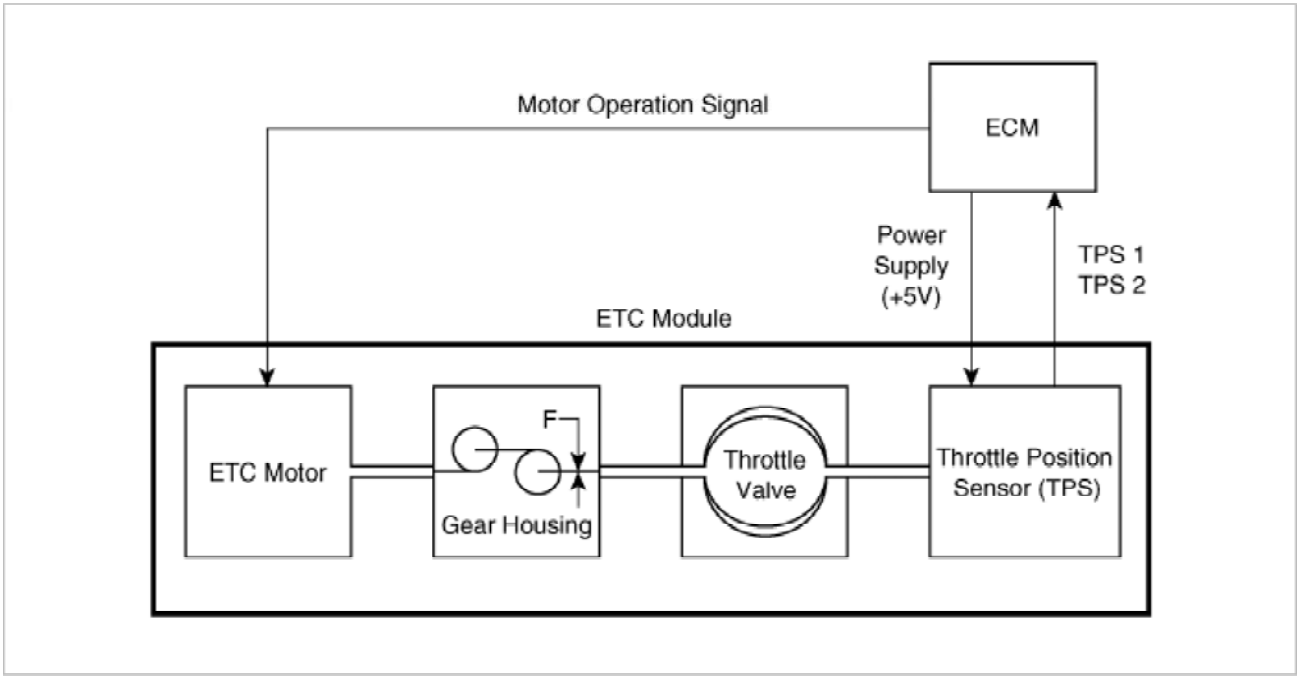

mcx30.com

Troubleshooting

Fail-Safe Mode

Item	Fail-Safe	
ETC Motor	Throttle valve stuck at 5°	
TPS	TPS 1 fault	Replace it with TPS 2
	TPS 2 fault	Replace it with TPS 1
	TPS 1,2 fault	Throttle valve stuck at 5°
APS	APS 1 fault	Replace it with APS 2
	APS 2 fault	Replace it with APS 1
	APS 1,2 fault	Throttle valve stuck at 5°

NOTE

When throttle value is stuck at 5°, engine speed is limited at below 1,500rpm and vehicle speed at maximum 40 ~ 50 km/h (25 ~ 31 mph)

Fuel System > Engine Control System > ETC (Electronic Throttle Control) System > Specifications

Specification

[Throttle Position Sensor (TPS)]

Throttle Angle(°)	Output Voltage(V)	
	TPS1	TPS2
0	0.0	5.0
10	0.48	4.52
20	0.95	4.05
30	1.43	3.57
40	1.90	3.10
50	2.38	2.62
60	2.86	2.14
70	3.33	1.67
80	3.81	1.19
90	4.29	0.71
100	4.76	0.24
105	5.0	0
C.T (6 ~ 15°)	0.29 ~ 0.71	4.29 ~ 4.71
W.O.T (93 ~ 102°)	4.43 ~ 4.86	0.14 ~ 0.57

mcx30.com

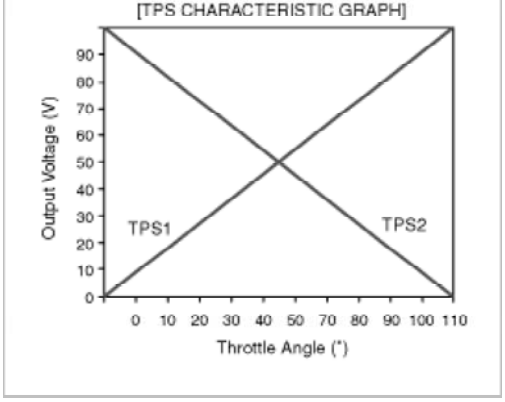

Item	Sensor Resistance(kΩ)
TPS1	0.875 ~ 1.625 [20°C(68°F)]
TPS2	0.875 ~ 1.625 [20°C(68°F)]

[ETC Motor]

Item	Specification
Coil Resistance (Ω)	1.2 ~ 1.8 [20°C(68°F)]

Fuel System > Engine Control System > ETC (Electronic Throttle Control) System > Schematic Diagrams

Circuit Diagram

mcx30.com

[Circuit Diagram]

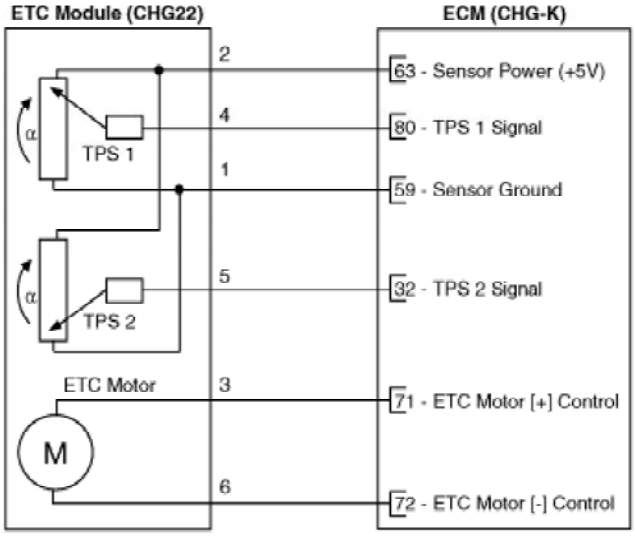

[Connection Information]

Terminal	Connected to	Function
1	ECM CHG-K (59)	Sensor Ground
2	ECM CHG-K (63)	Sensor Power (+5V)
3	ECM CHG-K (71)	ETC Motor [+] Control
4	ECM CHG-K (80)	TPS 1 Signal
5	ECM CHG-K (32)	TPS 2 Signal
6	ECM CHG-K (72)	ETC Motor [-] Control

[Harness Connector]

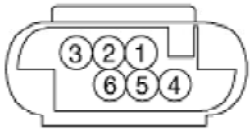

CHG22
ETC Module

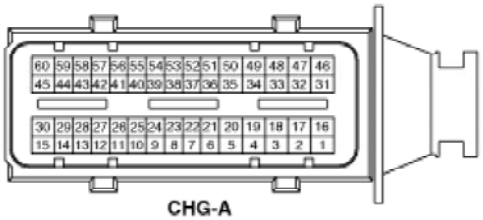

CHG-A

CHG-K
ECM

Fuel System > Engine Control System > ETC (Electronic Throttle Control) System > Repair procedures

Inspection

Throttle Position Sensor (TPS)

1. Connect the GDS on the Data Link Connector (DLC).
2. Start the engine and measure the output voltage of TPS 1 and 2 at C.T. and W.O.T.

Throttle Angle	Output Voltage (V)	
	TPS 1	TPS 2
C.T	0.3 ~ 0.9	4.2 ~ 5.0
W.O.T	1.5 ~ 3.0	3.3 ~ 3.8

3. Turn the ignition switch OFF and disconnect the scantool from the DLC.
4. Disconnect the ETC module connector and measure the resistance between the ETC module terminals 1 and 2.

Specification: Refer to “Specification”

ETC Motor

1. Turn the ignition switch OFF.

mcx30.com

3. Measure resistance between the ETC module terminals 3 and 6.
4. Check that the resistance is within the specification.

Specification: Refer to “Specification”

Removal

1. Turn the ignition switch OFF and disconnect the battery negative (-) cable.
2. Remove the resonator and the air intake hose (Refer to “Intake And Exhaust System” in EM group).
3. Disconnect the ETC module connector (A).
4. Disconnect the coolant hoses (B).
5. Remove the installation bolts (C), and then remove the ETC module from the engine.

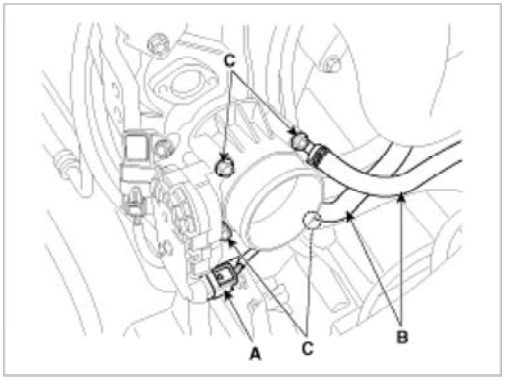

Installation

CAUTION

- Install the component with the specified torques.
- Note that internal damage may occur when the component is dropped. In this case, use it after inspecting.

1. Installation is reverse of removal.

Electronic throttle body Installation bolt:
7.8 ~ 11.8 N.m (0.8 ~ 1.2 kgf.m, 5.8 ~ 8.7 lb-ft)

Fuel System > Engine Control System > Manifold Absolute Pressure Sensor (MAPS) > Description and Operation

Description

Manifold Absolute Pressure Sensor (MAPS) is a speed-density type sensor and is installed on the surge tank. It senses absolute pressure of the surge tank and transfers the analog signal proportional to the pressure to the ECM. By using this signal, the ECM calculates the intake air quantity and engine speed.
The MAPS consists of a piezo-electric element and a hybrid IC amplifying the element output signal. The element is silicon diaphragm type and adapts pressure sensitive variable resistor effect of semi-conductor. Because 100% vacuum and the manifold pressure apply to both sides of the sensor respectively, this sensor can output analog signal by using the silicon variation proportional to pressure change.

mcx30.com

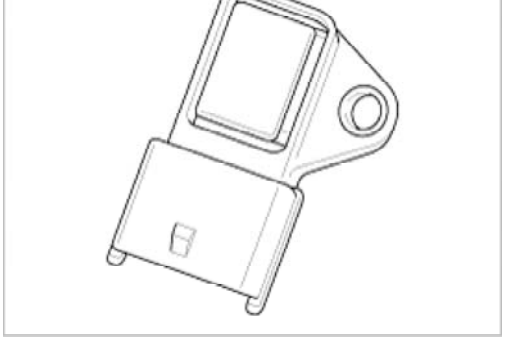

Fuel System > Engine Control System > Manifold Absolute Pressure Sensor (MAPS) > Specifications

Specification

Pressure [kPa (kgf/cm², psi)]	Output Voltage (V)
20.0 (0.20, 2.9)	0.79
46.7 (0.47, 6.77)	1.84
101.3 (1.03, 14.7)	4.0

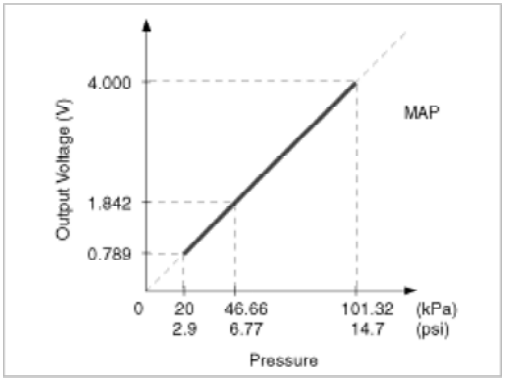

Fuel System > Engine Control System > Manifold Absolute Pressure Sensor (MAPS) > Schematic Diagrams

Circuit Diagram

mcx30.com

[Circuit Diagram]

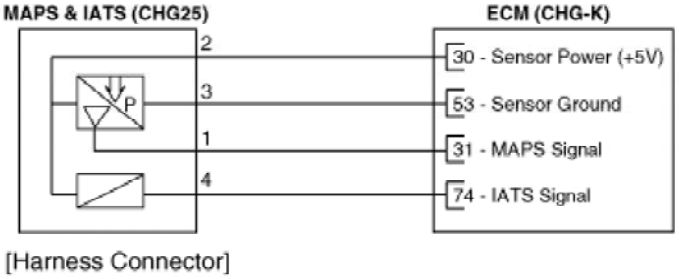

[Connection Information]

Terminal	Connected to	Function
1	ECM CHG-K (31)	MAPS #1 Signal
2	ECM CHG-K (30)	Sensor Power (+5V)
3	ECM CHG-K (53)	Sensor Ground
4	ECM CHG-K (74)	IATS Signal

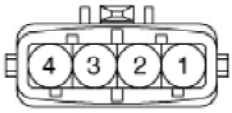

CHG25
MAPS & IATS

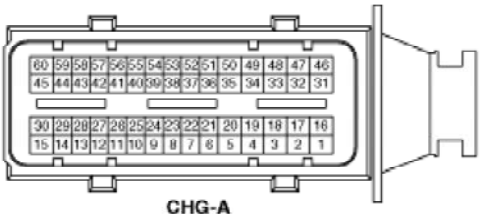

CHG-A

CHG-K
ECM

Fuel System > Engine Control System > Manifold Absolute Pressure Sensor (MAPS) > Repair procedures

Inspection

1. Connect the GDS on the Data Link Connector (DLC).
2. Measure the output voltage of the MAPS at idle and IG ON.

Specification: Refer to "Specification"

Removal

1. Turn the ignition switch OFF and disconnect the battery negative (-) cable.
2. Disconnect the manifold absolute pressure sensor connector (A).
3. Remove the installation bolt (B), and then remove the sensor from the surge tank.

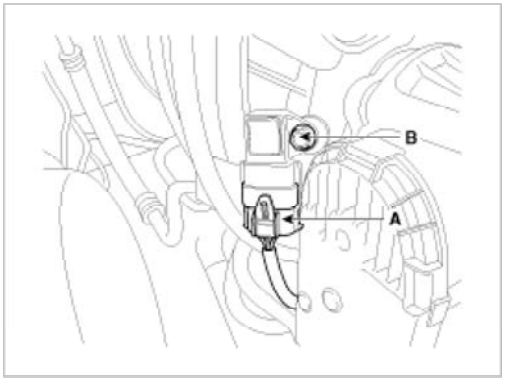

Installation

CAUTION

mcx30.com

• Note that internal damage may occur when the component is dropped. In this case, use it after inspecting.

CAUTION

• Insert the sensor in the installation hole and be careful not to damage when installation.

1. Installation is reverse of removal.

Manifold absolute pressure sensor installation bolt:
9.8 ~ 11.8 N.m (1.0 ~ 1.2 kgf.m, 7.2 ~ 8.7 lb-ft)

Fuel System > Engine Control System > Intake Air Temperature Sensor (IATS) > Description and Operation

Description

Intake Air Temperature Sensor (IATS) is included inside Manifold Absolute Pressure Sensor and detects the intake air temperature.
To calculate precise air quantity, correction of the air temperature is needed because air density varies according to the temperature. So the ECM uses not only MAPS signal but also IATS signal. This sensor has a Negative Temperature Coefficient (NTC) Thermister and it's resistance changes in reverse proportion to the temperature.

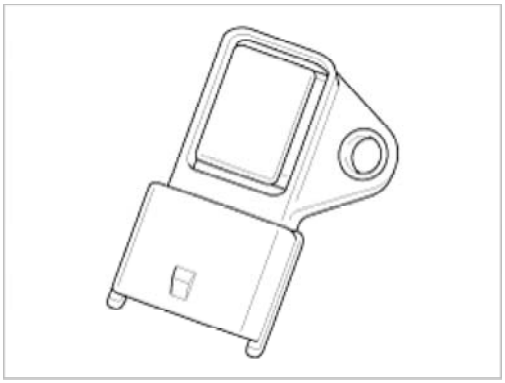

Fuel System > Engine Control System > Intake Air Temperature Sensor (IATS) > Specifications

Specification

Temperature [°C(°F)]	Resistance (kΩ)
-40(-40)	40.93 ~ 48.35
-20(-4)	13.89 ~ 16.03
0(32)	5.38 ~ 6.09
10(50)	3.48 ~ 3.90
20(68)	2.31 ~ 2.57
40(104)	1.08 ~ 1.21
50(122)	0.76 ~ 0.85
60(140)	0.54 ~ 0.62
80(176)	0.29 ~ 0.34

Fuel System > Engine Control System > Intake Air Temperature Sensor (IATS) > Schematic Diagrams

mcx30.com

[Circuit Diagram]

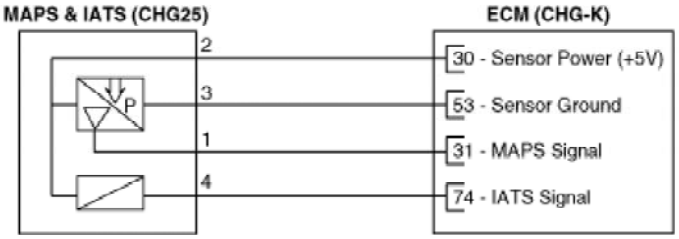

[Connection Information]

Terminal	Connected to	Function
1	ECM CHG-K (31)	MAPS #1 Signal
2	ECM CHG-K (30)	Sensor Power (+5V)
3	ECM CHG-K (53)	Sensor Ground
4	ECM CHG-K (74)	IATS Signal

[Harness Connector]

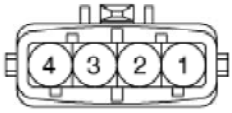

CHG25
MAPS & IATS

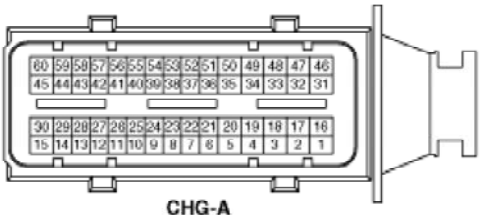

CHG-A

CHG-K
ECM

Fuel System > Engine Control System > Intake Air Temperature Sensor (IATS) > Repair procedures

Inspection

1. Turn the ignition switch OFF.
2. Disconnect the IATS connector.
3. Measure resistance between the IATS terminals 3 and 4.
4. Check that the resistance is within the specification.

Specification: Refer to “Specification”

Fuel System > Engine Control System > Engine Coolant Temperature Sensor (ECTS) > Description and Operation

Description

Engine Coolant Temperature Sensor (ECTS) is located in the engine coolant passage of the cylinder head for detecting the engine coolant temperature. The ECTS uses a thermistor whose resistance changes with the temperature.
The electrical resistance of the ECTS decreases as the temperature increases, and increases as the temperature decreases. The reference +5V is supplied to the ECTS via a resistor in the ECM. That is, the resistor in the ECM and the thermistor in the ECTS are connected in series. When the resistance value of the thermistor in the ECTS changes according to the engine coolant temperature, the output voltage also changes.
During cold engine operation, the ECM increases the fuel injection duration and controls the ignition timing using the information of engine coolant temperature to avoid engine stalling and improve drivability.

mcx30.com

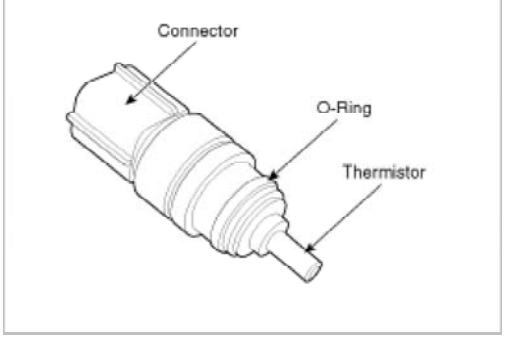

Fuel System > Engine Control System > Engine Coolant Temperature Sensor (ECTS) > Specifications

Specification

Temperature		Resistance (kΩ)
°C	°F	
-40	-40	48.14
-20	-4	14.13 ~ 16.83
0	32	5.79
20	68	2.31 ~ 2.59
40	104	1.15
60	140	0.59
80	176	0.32

Fuel System > Engine Control System > Engine Coolant Temperature Sensor (ECTS) > Schematic Diagrams

Circuit Diagram

mcx30.com

[Circuit Diagram]

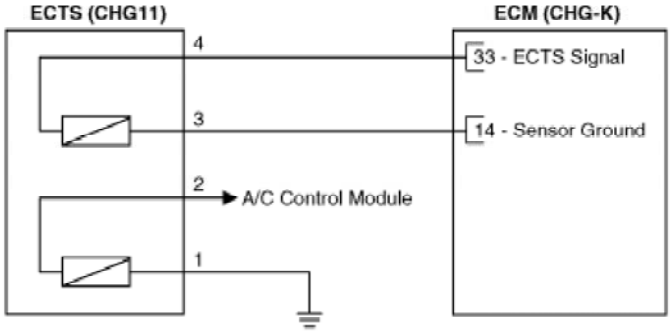

[Harness Connector]

[Connection Information]

Terminal	Connected to	Function
1	Chassis Ground	Sensor Ground
2	A/C Control Module	-
3	ECM CHG-K (14)	Sensor Ground
4	ECM CHG-K (33)	ECTS Signal

CHG11
ECTS

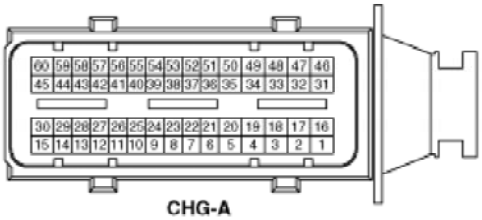

CHG-A

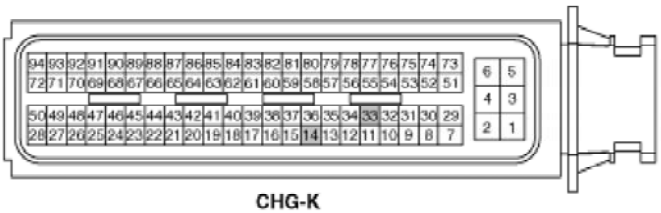

CHG-K
ECM

Fuel System > Engine Control System > Engine Coolant Temperature Sensor (ECTS) > Repair procedures

Inspection

1. Turn the ignition switch OFF.
2. Disconnect the ECTS connector.
3. Remove the ECTS.
4. After immersing the thermistor of the sensor into engine coolant, measure resistance between the ECTS terminals 3 and 4.
5. Check that the resistance is within the specification.

Specification: Refer to “Specification”

Removal

1. Turn the ignition switch OFF and disconnect the battery negative (-) cable.
2. Disconnect the engine coolant temperature sensor connector (A).

mcx30.com

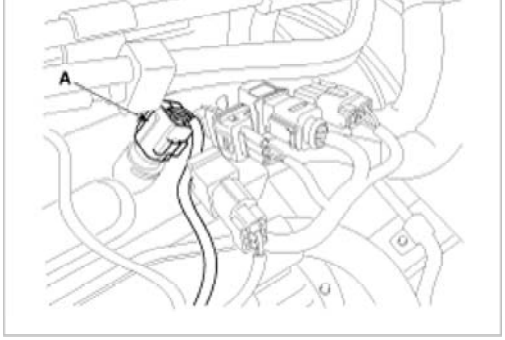

3. Remove the fixing clip (A), and then pull the sensor from the water temperature control assembly.

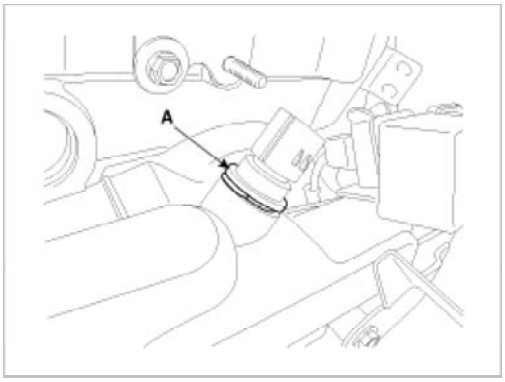

CAUTION

Note that engine coolant may be flowed out from the water temperature control assembly when removing the sensor.

4. Supplement the engine coolant (Refer to “Cooling System” in EM group).

Installation

CAUTION

- Install the component with the specified torques.
- Note that internal damage may occur when the component is dropped.

CAUTION

- Apply the engine coolant to the O-ring.

CAUTION

- Insert the sensor in the installation hole and be careful not to damage.

1. Installation is reverse of removal.

Fuel System > Engine Control System > Crankshaft Position Sensor (CKPS) > Description and Operation

Description

Crankshaft Position Sensor (CKPS) detects the crankshaft position and is one of the most important sensors of the engine control system. If there is no CKPS signal input, fuel is not supplied.That is, vehicle can't run without CKPS signal. This sensor is installed on the cylinder block or the transaxle housing and generates alternating current by magnetic flux field which is made by the sensor and the target wheel when engine runs.
The target wheel consists of 58 slots and 2 missing slots on 360 degrees CA (Crank Angle).

mcx30.com

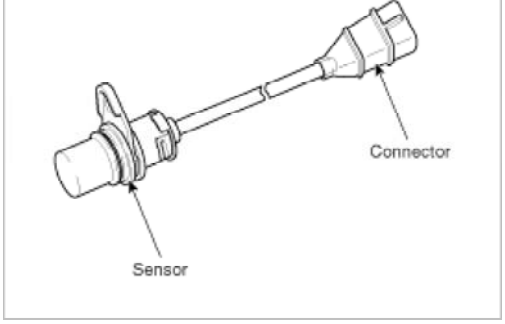

Fuel System > Engine Control System > Crankshaft Position Sensor (CKPS) > Troubleshooting

Wave Form

Fuel System > Engine Control System > Crankshaft Position Sensor (CKPS) > Schematic Diagrams

Circuit Diagram

mcx30.com

[Circuit Diagram]

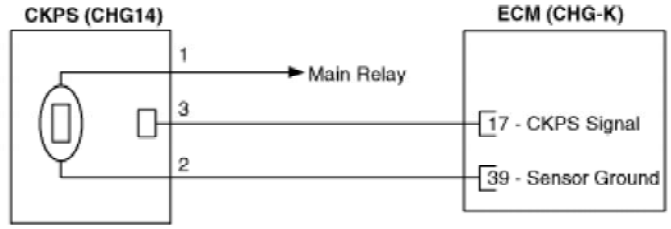

[Connection Information]

Terminal	Connected to	Function
1	Main Relay	Battery Power (B+)
2	ECM CHG-K (39)	Sensor Ground
3	ECM CHG-K (17)	CKPS Signal

[Harness Connector]

CHG14
CKPS

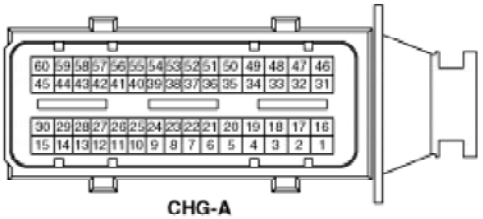

CHG-A

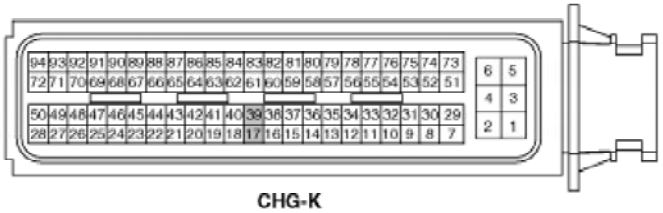

CHG-K
ECM

Fuel System > Engine Control System > Crankshaft Position Sensor (CKPS) > Repair procedures

Inspection

1. Check the signal waveform of the CMPS and CKPS using the GDS.

Specification: Refer to “Wave Form”

Removal

1. Turn the ignition switch OFF and disconnect the battery negative (-) cable.
2. Disconnect the crankshaft position sensor connector (A).

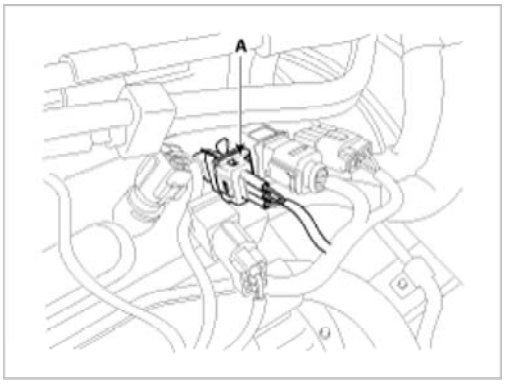

3. Remove the protector (A).

mcx30.com

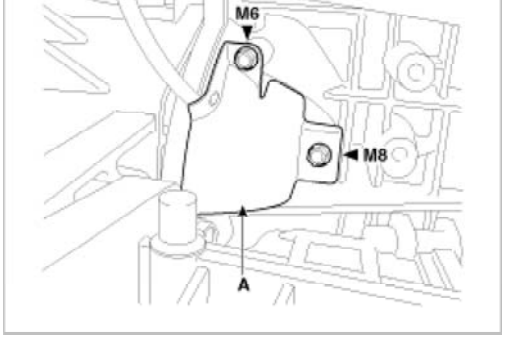

4. Remove the installation bolt (A), and then remove the crankshaft position sensor.

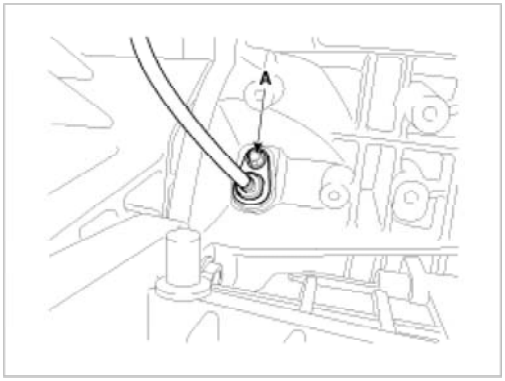

Installation

CAUTION

- Install the component with the specified torques.
- Note that internal damage may occur when the component is dropped. In this case, use it after inspecting.

CAUTION

- Apply the engine oil to the O-ring.

CAUTION

- Insert the sensor in the installation hole and be careful not to damage when installation.

1. Installation is reverse of removal.

Crankshaft position sensor installation bolt: 9.8 ~ 11.8 N.m (1.0 ~ 1.2 kgf.m, 7.2 ~ 8.7 lb-ft)
Crankshaft position sensor protector installation bolt (M8): 18.6 ~ 23.5 N.m (1.9 ~ 2.4 kgf.m, 13.7 ~ 17.4 lb-ft)
Crankshaft position sensor protector installation bolt (M6): 9.8 ~ 11.8 N.m (1.0 ~ 1.2 kgf.m, 7.2 ~ 8.7 lb-ft)

Fuel System > Engine Control System > Camshaft Position Sensor (CMPS) > Description and Operation

Description

Camshaft Position Sensor (CMPS) is a hall sensor and detects the camshaft position by using a hall element.
It is related with Crankshaft Position Sensor (CKPS) and detects the piston position of each cylinder which the CKPS can't detect.
The CMPS is installed on engine head cover and uses a target wheel installed on the camshaft. The Cam Position sensor is a hall-effect type sensor. As the target wheel passes the Hall sensor, the magnetic field changes in the sensor. The sensor then switches a signal which creates a square wave.

mcx30.com

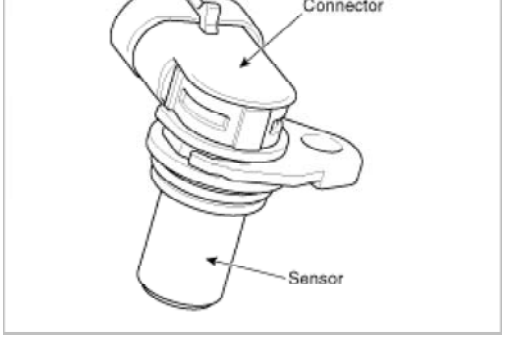

Fuel System > Engine Control System > Camshaft Position Sensor (CMPS) > Troubleshooting

Wave Form

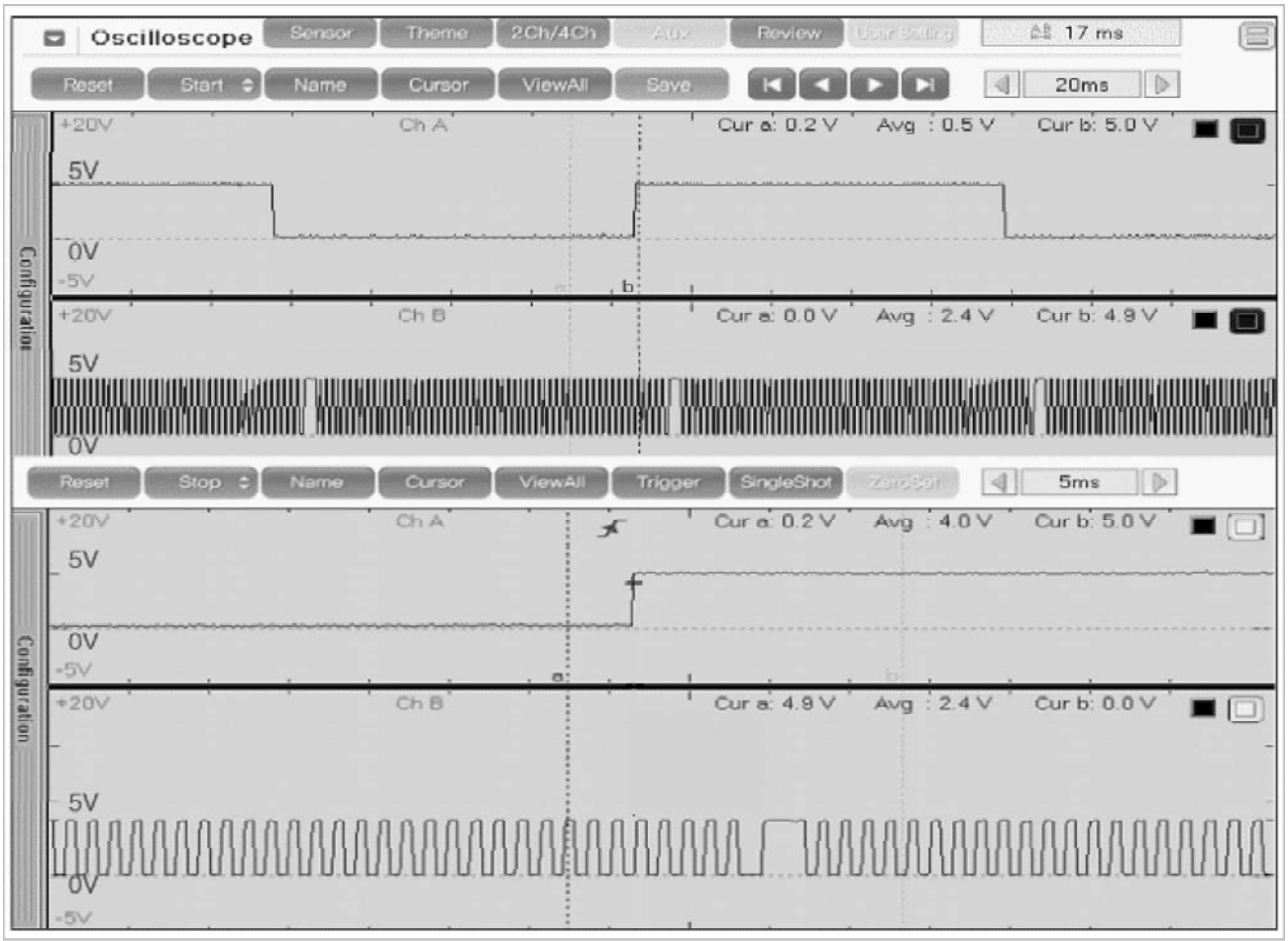

Fuel System > Engine Control System > Camshaft Position Sensor (CMPS) > Schematic Diagrams

Circuit Diagram

mcx30.com

[Circuit Diagram]

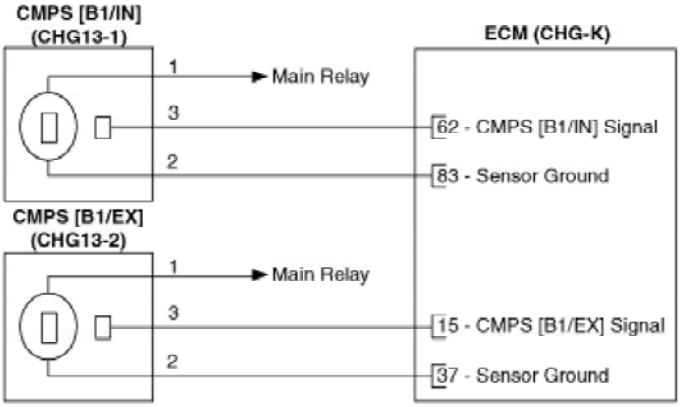

[Connection Information]

CMPS [B1/IN] (CHG13-1)

Terminal	Connected to	Function
1	Main Relay	Battery Power (B+)
2	ECM CHG-K (83)	Sensor Ground
3	ECM CHG-K (62)	CMPS [B1/IN] Signal

CMPS [B1/EX] (CHG13-2)

Terminal	Connected to	Function
1	Main Relay	Battery Power (B+)
2	ECM CHG-K (37)	Sensor Ground
3	ECM CHG-K (15)	CMPS [B1/EX] Signal

[Harness Connector]

CHG13-1
CMPS [B1/IN]

CHG13-2
CMPS [B1/EX]

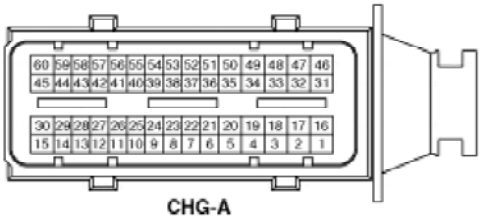

CHG-A

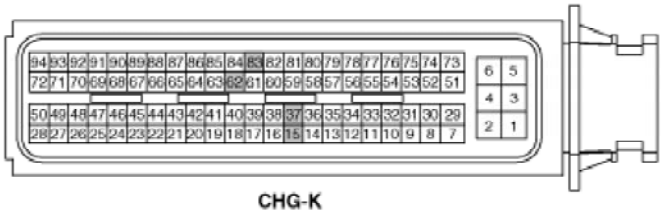

CHG-K
ECM

Fuel System > Engine Control System > Camshaft Position Sensor (CMPS) > Repair procedures

Inspection

1. Check the signal waveform of the CMPS and CKPS using the GDS.

Specification: Refer to “Wave Form”

Removal

WARNING

- DON’T remove the camshaft position sensor during engine running or right after engine stops, or a scald by the flowed out engine oil may occur.

[Bank 1 / Intake]

1. Turn the ignition switch OFF and disconnect the battery negative (-) cable.
2. Disconnect the camshaft position sensor connector (A).
3. Remove the installation bolt (B), and then remove the sensor.

mcx30.com

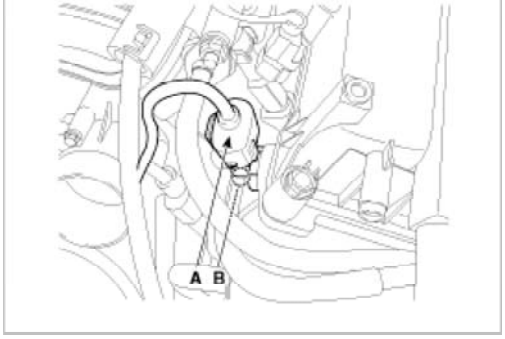

[Bank 1 / Exhaust]

1. Turn the ignition switch OFF and disconnect the battery negative (-) cable.
2. Disconnect the camshaft position sensor connector (A).
3. Remove the hanger and the protector.
4. Remove the installation bolt (B), and then remove the sensor.

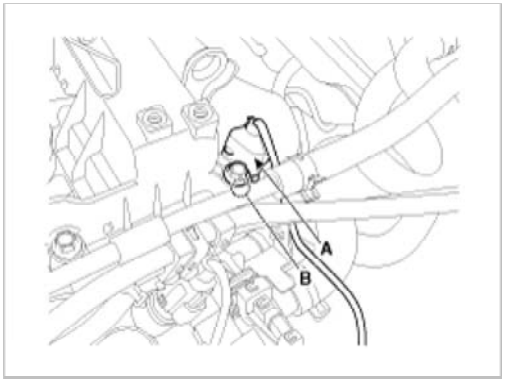

Installation

CAUTION

- Install the component with the specified torques.
- Note that internal damage may occur when the component is dropped. In this case, use it after inspecting.

CAUTION

- Apply the engine oil to the O-ring.

CAUTION

- Insert the sensor in the installation hole and be careful not to damage when installation.

CAUTION

- Be careful not to damage the sensor housing and the connector.
- Be careful not to damage the O-ring.

1. Installation is reverse of removal.

Camshaft position sensor installation bolt:
9.8 ~ 11.8 N.m (1.0 ~ 1.2 kgf.m, 7.2 ~ 8.7 lb-ft)

Fuel System > Engine Control System > Knock Sensor (KS) > Description and Operation

Description

mcx30.com

Sensor (KS) is installed on the cylinder block and senses engine knocking.
When knocking occurs, the vibration from the cylinder block is applied as pressure to the piezoelectric element. When a knock occurs, the sensor produces voltage signal. The ECM retards the ignition timing when knocking occurs. If the knocking disappears after retarding the ignition timing, the ECM will advance the ignition timing. This sequential control can improve engine power, torque and fuel economy.

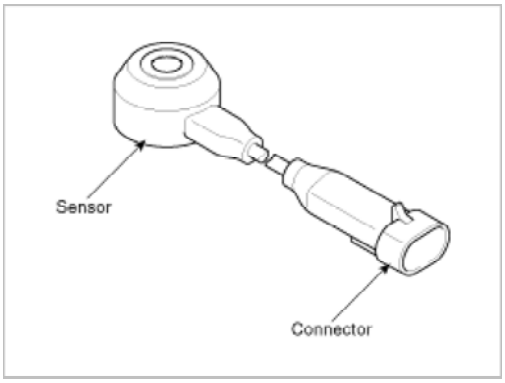

Fuel System > Engine Control System > Knock Sensor (KS) > Specifications

Specification

Item	Specification
Capacitance (pF)	850 ~ 1,150

Fuel System > Engine Control System > Knock Sensor (KS) > Schematic Diagrams

Circuit Diagram

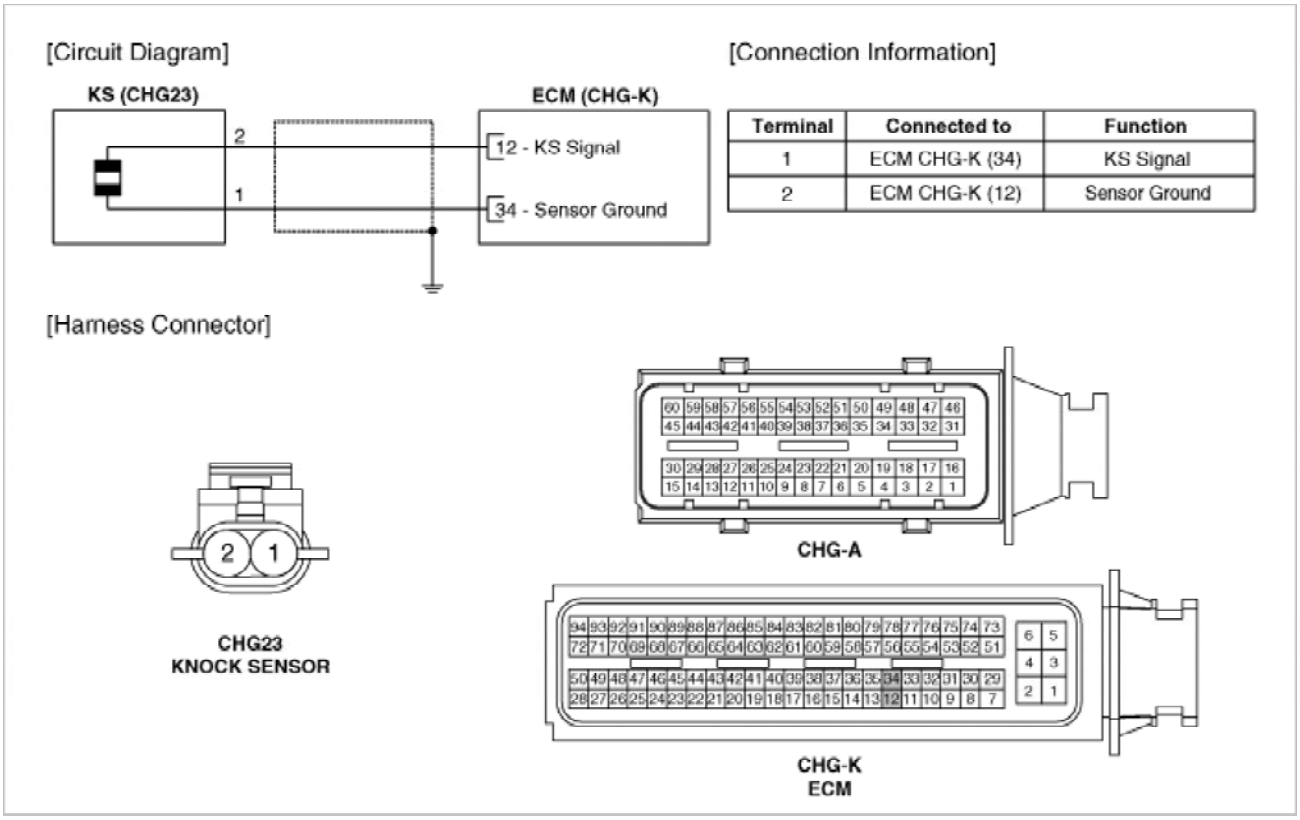

Terminal	Connected to	Function
1	ECM CHG-K (34)	KS Signal
2	ECM CHG-K (12)	Sensor Ground

Fuel System > Engine Control System > Knock Sensor (KS) > Repair procedures

Removal

mcx30.com

2. Drain the engine coolant (Refer to “Cooling System” in EM group).
3. Remove the radiator upper hose (Refer to “Cooling System” in EM group).
4. Disconnect the knock sensor connector (A).

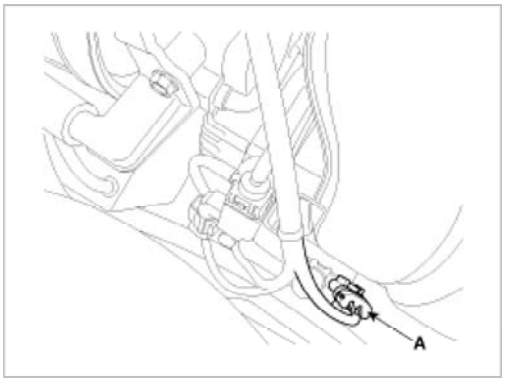

5. Remove the intake manifold (Refer to “Intake And Exhaust System” in EM group).
6. Remove the installation bolt (A), and then remove the sensor from the cylinder block.

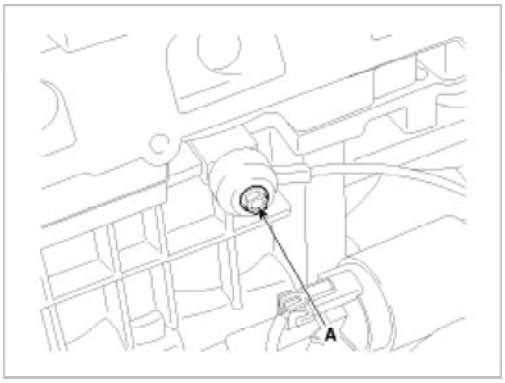

Installation

CAUTION

- Install the component with the specified torques.
- Note that internal damage may occur when the component is dropped. In this case, use it after inspecting.

1. Installation is reverse of removal.

Knock sensor installation bolt:
18.6 ~ 23.5 N.m (1.9 ~ 2.4 kgf.m, 13.7 ~ 17.4 lb-ft)

Fuel System > Engine Control System > Heated Oxygen Sensor (HO2S) > Description and Operation

Description

Heated Oxygen Sensor (HO2S) consists of zirconium and alumina and is installed both upstream and downstream of the Manifold Catalytic Converter. It varies in accordance with the air/fuel ratio.
The sensor must be hot in order to operate normally. To keep it hot, the sensor has a heater which is controlled by the ECM via a duty cycle signal. When the exhaust gas temperature is lower than the specified value, the heater warms the sensor tip.

mcx30.com

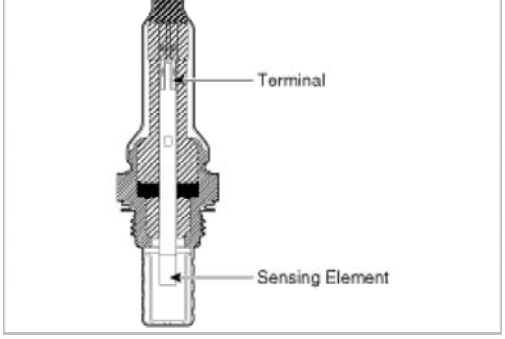

Fuel System > Engine Control System > Heated Oxygen Sensor (HO2S) > Specifications

Specification

HO2S [Bank 1/Sensor 1]

Item	Specification
Heater Resistance (Ω)	2.5 ~ 4.0 [20°C(68°F)]

HO2S [Bank 1/Sensor 2]

A/F Ratio (λ)	Output Voltage(V)
RICH	Approx. 0.9
LEAN	Approx. 0.04

Item	Specification
Heater Resistance (Ω)	3.3 ~ 4.1Ω[21°C(69.8°F)]

Fuel System > Engine Control System > Heated Oxygen Sensor (HO2S) > Schematic Diagrams

Circuit Diagram

mcx30.com

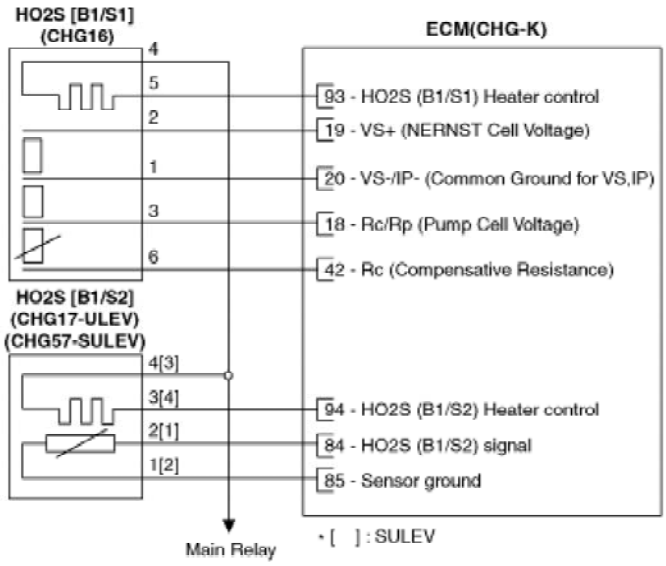

HO2S [B1/S1] (CHG16)

Terminal	Connected to	Function
1	ECM CHG-K (20)	VS-/IP- (Common Ground for VS,IP)
2	ECM CHG-K (19)	VS+ (NERNST Cell Voltage)
3	ECM CHG-K (18)	Rc/Rp (Pump Cell Voltage)
4	Main Relay	Power Supply (B+)
5	ECM CHG-K (93)	Heater control
6	ECM CHG-K (42)	Rc (Compensative Resistance)

HO2S [B1/S2] (CHG17-ULEV)
HO2S [B1/S2] (CHG57-SULEV)

Terminal	Connected to	Function
1[2]	ECM CHG-K (85)	Sensor Ground
2[1]	ECM CHG-K (84)	HO2S (B1/S2) Signal
3[4]	ECM CHG-K (94)	Heater control
4[3]	Main Relay	Power Supply (B+)

* [ ] : SULEV

[Harness Connector]

CHG16
HO2S [B1/S1]

CHG17
HO2S [B1/S2] (ULEV)

CHG57
HO2S [B1/S2] (SULEV)

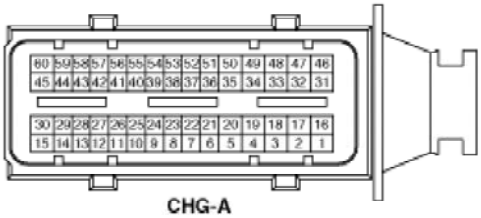

CHG-A

CHG-K
ECM

Fuel System > Engine Control System > Heated Oxygen Sensor (HO2S) > Repair procedures

Inspection

1. Turn the ignition switch OFF.
2. Disconnect the HO2S connector.
3. Measure resistance between the HO2S terminals 4 and 5 [B1/S1].
   Measure resistance between the HO2S terminals 3 and 4 [B1/S2].
4. Check that the resistance is within the specification.

Specification: Refer to “Specification”

Removal

[SULEV]

1. Turn the ignition switch OFF and disconnect the battery negative (-) cable.
2. Disconnect the connector (A), and then remove the sensor (B).

NOTE

Note that the SST (Part No.: 09392-2H100) is useful when removing the heated oxygen sensor.

mcx30.com

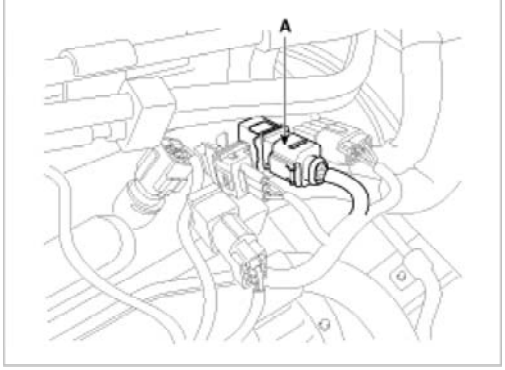

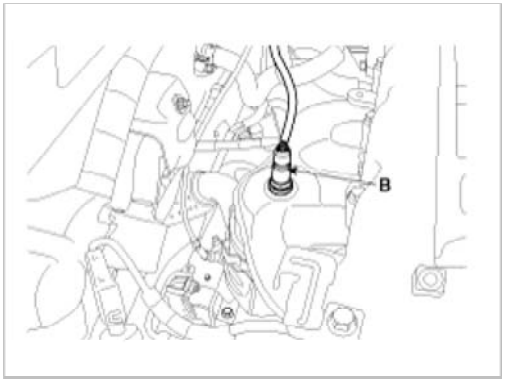

[Bank 1 / Sensor 2]

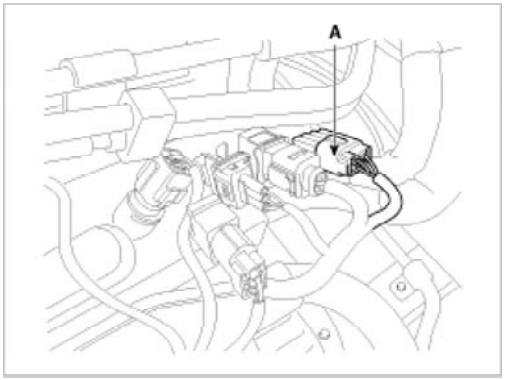

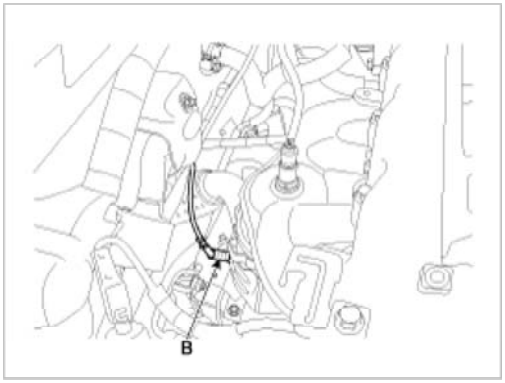

[ULEV]

[Bank 1 / Sensor 1]

1. Turn the ignition switch OFF and disconnect the battery negative (-) cable.
2. Disconnect the connector (A), and then remove the sensor (B).

NOTE

Note that the SST (Part No.: 09392-2H100) is useful when removing the heated oxygen sensor.

mcx30.com

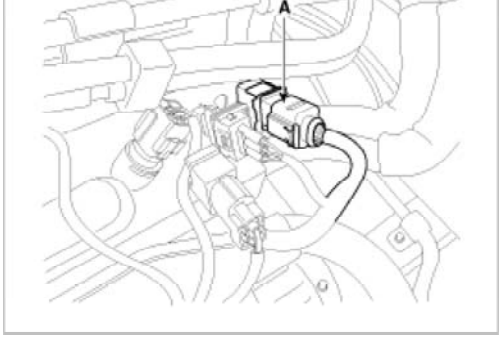

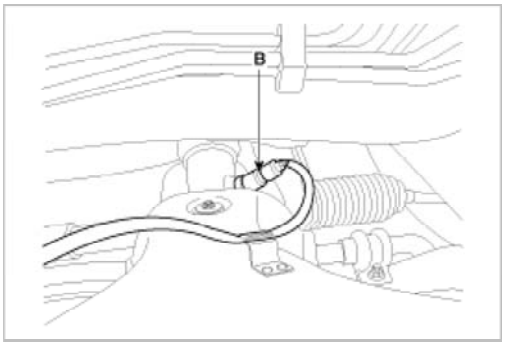

[Bank 1 / Sensor 2]

1. Turn the ignition switch OFF and disconnect the battery negative (-) cable.
2. Remove the console assembly. (Refer to "Console" in BD group.)
3. Disconnect the connector (A), and then remove the sensor (B).

> NOTE
>
> Note that the SST (Part No.: 09392-2H100) is useful when removing the heated oxygen sensor.

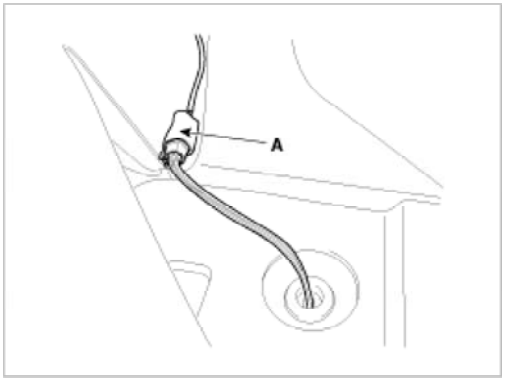

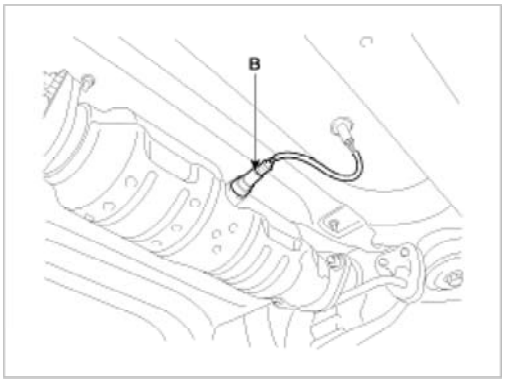

Installation

> CAUTION

mcx30.com

- Note that internal damage may occur when the component is dropped. In this case, use it after inspecting.

CAUTION

- DON'T use a cleaner, spray, or grease to sensing element and connector of the sensor because oil component in them may malfunction the sensor performance.
- Sensor and its wiring may be damaged in case of contacting with the exhaust system (Exhaust Manifold, Catalytic Converter, and so on).

1. Installation is reverse of removal.

Heated oxygen sensor installation [SULEV]:
39.2 ~ 49.1 N.m (4.0 ~ 5.0 kgf.m, 28.9 ~ 36.2 lb-ft)
Heated oxygen sensor installation [ULEV]:
44.1 ~ 49.1 N.m (4.5 ~ 5.0 kgf.m, 32.6 ~ 36.2 lb-ft)

Fuel System > Engine Control System > Accelerator Position Sensor (APS) > Description and Operation

Description

Accelerator Position Sensor (APS) is installed on the accelerator pedal module and detects the rotation angle of the accelerator pedal. The APS is one of the most important sensors in engine control system, so it consists of the two sensors which adapt individual sensor power and ground line. The second sensor monitors the first sensor and its output voltage is half of the first one. If the ratio of the sensor 1 and 2 is out of the range (approximately 1/2), the diagnostic system judges that it is abnormal.

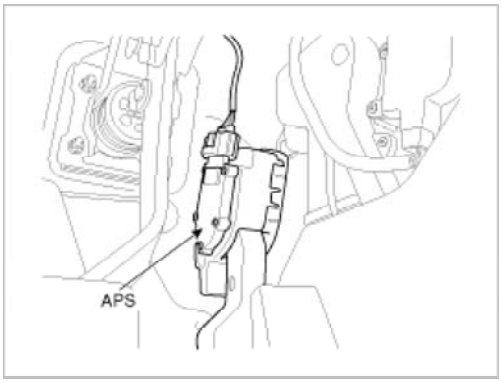

Fuel System > Engine Control System > Accelerator Position Sensor (APS) > Specifications

Specification

Accelerator Position	Output Voltage (V)	
	APS1	APS2
C.T	0.7 ~ 0.8	0.29 ~ 0.46
W.O.T	3.85 ~ 4.35	1.93 ~ 2.18

mcx30.com

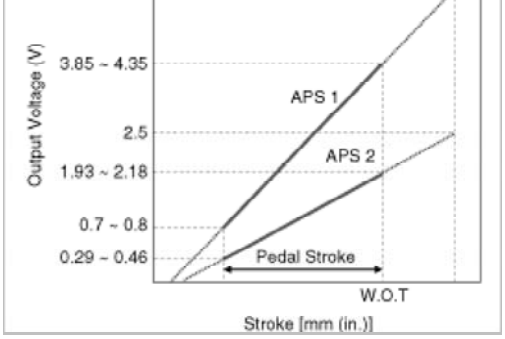

Fuel System > Engine Control System > Accelerator Position Sensor (APS) > Schematic Diagrams

Circuit Diagram

[Circuit Diagram]

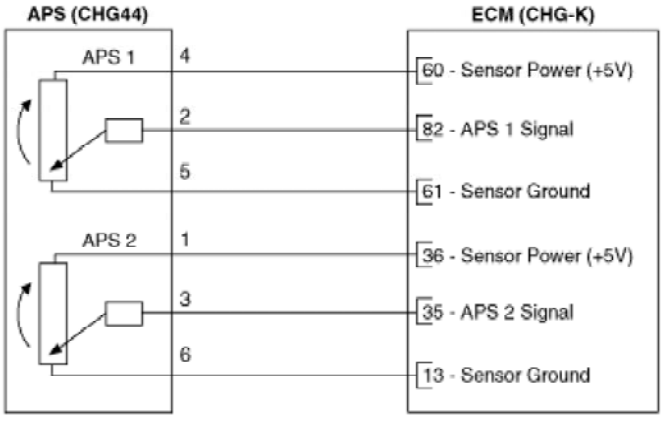

[Connection Information]

Terminal	Connected to	Function
1	ECM CHG-K (36)	APS 2 Sensor Power (+5V)
2	ECM CHG-K (82)	APS 1 Signal
3	ECM CHG-K (35)	APS 2 Signal
4	ECM CHG-K (60)	APS 1 Sensor Power (+5V)
5	ECM CHG-K (61)	APS 1 Sensor Ground
6	ECM CHG-K (13)	APS 2 Sensor Ground

[Harness Connector]

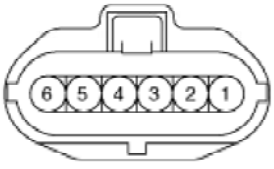

CHG44
APS

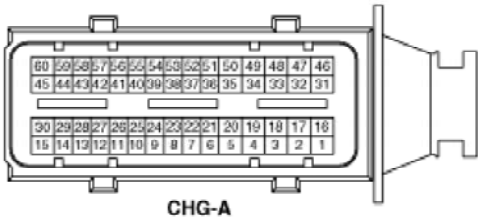

CHG-A

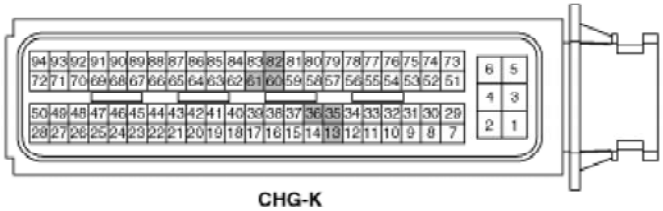

CHG-K
ECM

mcx30.com

Fuel System > Engine Control System > Accelerator Position Sensor (APS) > Repair procedures

Inspection

1. Connect the GDS on the Data Link Connector (DLC).
2. Turn the ignition switch ON.
3. Measure the output voltage of the APS 1 and 2 at C.T and W.O.T.

Fuel System > Engine Control System > Fuel Tank Pressure Sensor (FTPS) > Description and Operation

Description

Fuel Tank Pressure Sensor (FTPS) is a component of the evaporative emission control system and is installed on the fuel tank, the fuel pump, or the canister. It checks the purge control solenoid valve operation and detects a leakage of the system.

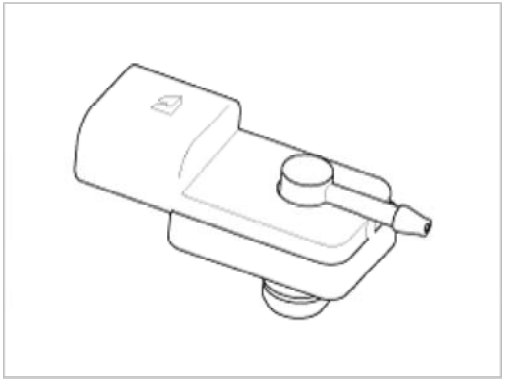

Fuel System > Engine Control System > Fuel Tank Pressure Sensor (FTPS) > Specifications

Specification

Pressure [kPa (kgf/cm², in H2O)	Output Voltage (V)
-6.67 (-0.068, -26.8)	0.5
0	2.5
+6.67 (0.068, 26.8)	4.5

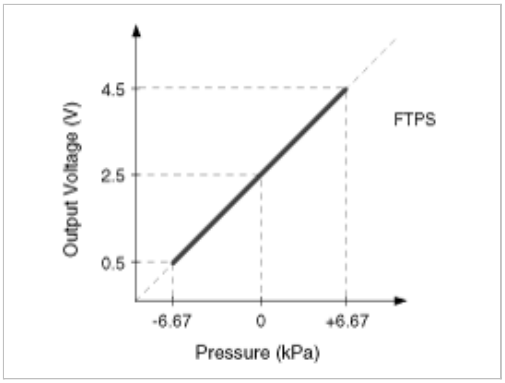

Fuel System > Engine Control System > Fuel Tank Pressure Sensor (FTPS) > Schematic Diagrams

Circuit Diagram

mcx30.com

[Circuit Diagram]

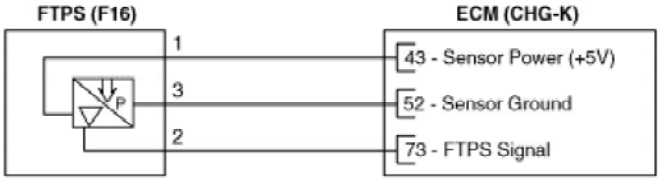

[Connection Information]

Terminal	Connected to	Function
1	ECM CHG-K (43)	Sensor Power (+5V)
2	ECM CHG-K (73)	FTPS Signal
3	ECM CHG-K (52)	Sensor Ground

[Harness Connector]

F16
FTPS

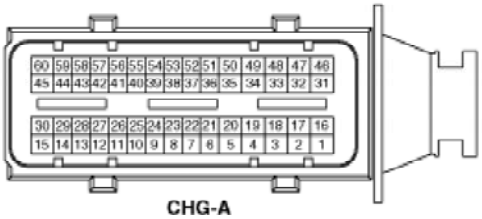

CHG-A

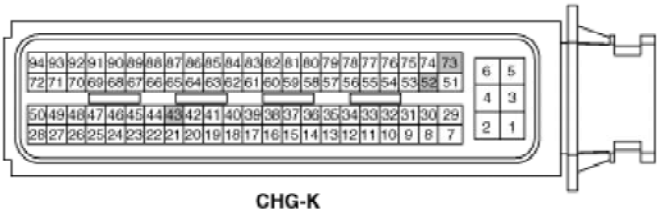

CHG-K
ECM

Fuel System > Engine Control System > Fuel Tank Pressure Sensor (FTPS) > Repair procedures

Inspection

1. Connect the GDS on the Data Link Connector (DLC).
2. Measure the output voltage of the FTPS.

Specification: Refer to "Specification"

Removal

1. Turn the ignition switch OFF and disconnect the battery negative (-) cable.
2. Remove the rear seat (Refer to "Seat" in BD group).
3. Remove the fuel pump service cover (A).

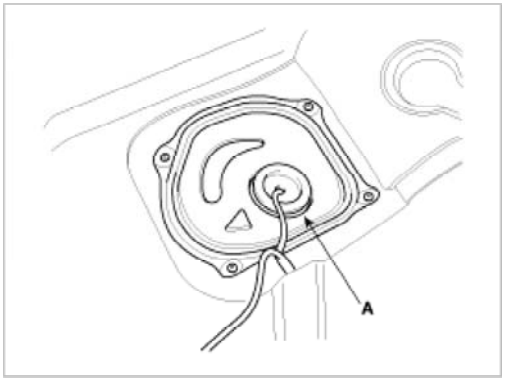

4. Disconnect the fuel tank pressure sensor connector (A).
5. Remove the fuel tank pressure sensor after releasing the hooks vertically.

mcx30.com

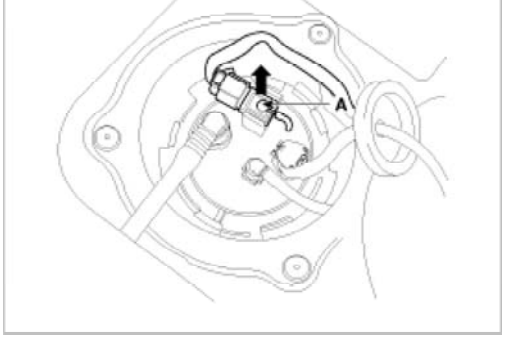

Installation

CAUTION

- Install the component with the specified torques.
- Note that internal damage may occur when the component is dropped. In this case, use it after inspecting.

CAUTION

- Insert the sensor in the installation hole and be careful not to damage when installation.

1. Installation is reverse of removal.

Fuel System > Engine Control System > Injector > Description and Operation

Description

Based on information from various sensors, the ECM can calculate the fuel amount to be injected. The fuel injector is a solenoid-operated valve and the fuel injection amount is controlled by length of injection time. The ECM controls each injector by grounding the control circuit. When the ECM energizes the injector by grounding the control circuit, the circuit voltage should be low (theoretically 0V) and the fuel is injected. When the ECM de-energizes the injector by opening control circuit, the fuel injector is closed and circuit voltage should momentarily peak.

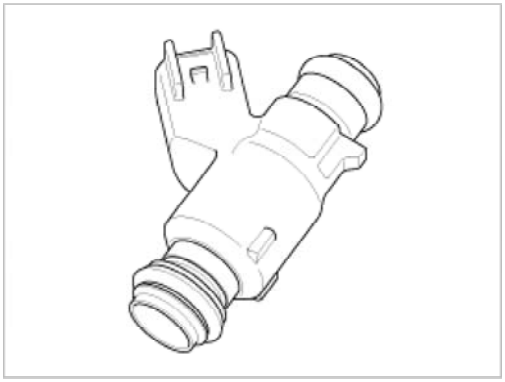

Fuel System > Engine Control System > Injector > Specifications

Specification

Item	Specification
Coil Resistance (Ω)	13.8 ~ 15.2 [20°C(68°F)]

Fuel System > Engine Control System > Injector > Schematic Diagrams

Circuit Diagram

mcx30.com

[Circuit Diagram]

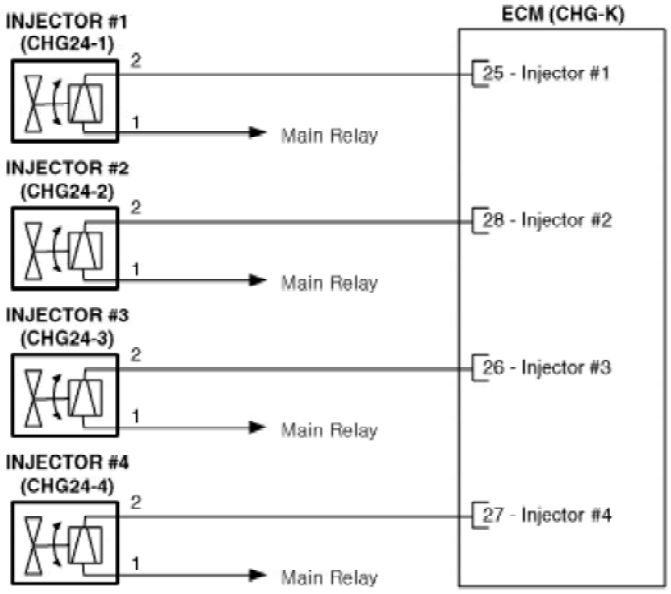

[Connection Information]

INJECTOR #1 (CHG24-1)

Terminal	Connected to	Function
1	Main Relay	Battery Power (B+)
2	ECM CHG-K (25)	Injector #1 Control

INJECTOR #2 (CHG24-2)

Terminal	Connected to	Function
1	Main Relay	Battery Power (B+)
2	ECM CHG-K (28)	Injector #2 Control

INJECTOR #3 (CHG24-3)

Terminal	Connected to	Function
1	Main Relay	Battery Power (B+)
2	ECM CHG-K (26)	Injector #3 Control

INJECTOR #4 (CHG24-4)

Terminal	Connected to	Function
1	Main Relay	Battery Power (B+)
2	ECM CHG-K (27)	Injector #4 Control

[Harness Connector]

CHG24-1,2,3,4
INJECTOR #1,2,3,4

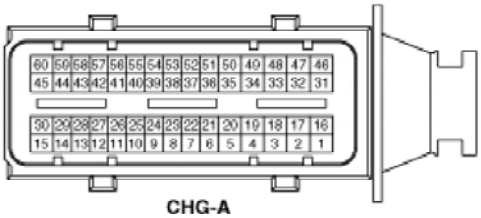

CHG-A

CHG-K
ECM

Fuel System > Engine Control System > Injector > Repair procedures

Inspection

1. Turn the ignition switch OFF.
2. Disconnect the injector connector.
3. Measure resistance between the injector terminals 1 and 2.
4. Check that the resistance is within the specification.

Specification: Refer to “Specification”

Removal

1. Turn the ignition switch OFF and disconnect the battery negative (-) cable.
2. Release the residual pressure in fuel line (Refer to “Release Residual Pressure in Fuel Line” in this group).

CAUTION

When removing the fuel pump relay, a Diagnostic Trouble Code (DTC) may occur. Delete the code with the GDS after completion of “Release Residual Pressure in Fuel Line” work.

mcx30.com

4. Remove the wiring harness bracket installation bolt (B).
5. Remove the installation nut, and then disconnect the fuel feed tube (C).
6. Remove the installation bolt (D), and then remove the delivery pipe & injector assembly from the engine.

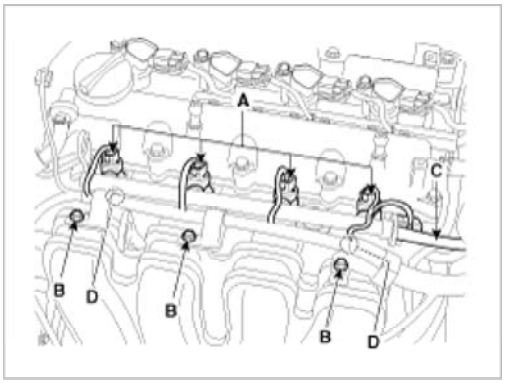

7. Remove the fixing clip (A), and then separate the injector from the delivery pipe.

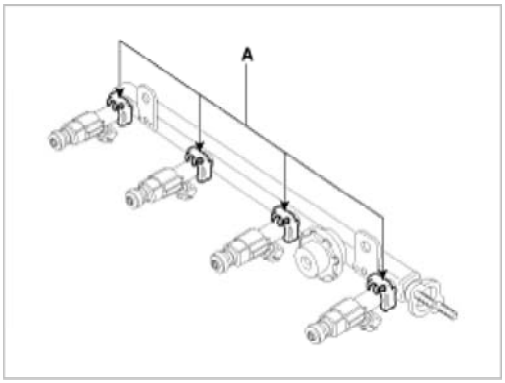

Installation

CAUTION

- Install the component with the specified torques.
- Note that internal damage may occur when the component is dropped. In this case, use it after inspecting.

CAUTION

- Apply the engine oil to the injector O-ring.

CAUTION

- Inspect the injector O-ring when installing.

1. Installation is reverse of removal.

Delivery pipe installation bolt:
18.6 ~ 23.5 N.m (1.9 ~ 2.4 kgf.m, 13.7 ~ 17.4 lb-ft)
Delivery pipe installation nut (↔ Fuel feed tube):
7.8 ~ 9.8 N.m (0.8 ~ 1.0 kgf.m, 5.8 ~ 7.2 lb-ft)

Fuel System > Engine Control System > Purge Control Solenoid Valve (PCSV) > Description and Operation

Description

Purge Control Solenoid Valve (PCSV) is installed on the surge tank and controls the passage between the canister and the intake manifold. It is a solenoid valve and is open when the ECM grounds the valve control line. When the passage is

mcx30.com

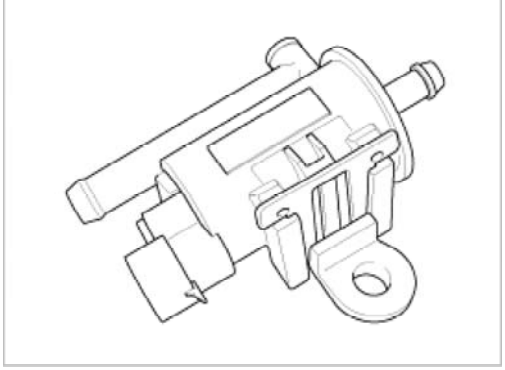

Fuel System > Engine Control System > Purge Control Solenoid Valve (PCSV) > Specifications

Specification

Item	Specification
Coil Resistance (Ω)	19.0 ~ 22.0 [20°C(68°F)]

Fuel System > Engine Control System > Purge Control Solenoid Valve (PCSV) > Schematic Diagrams

Circuit Diagram

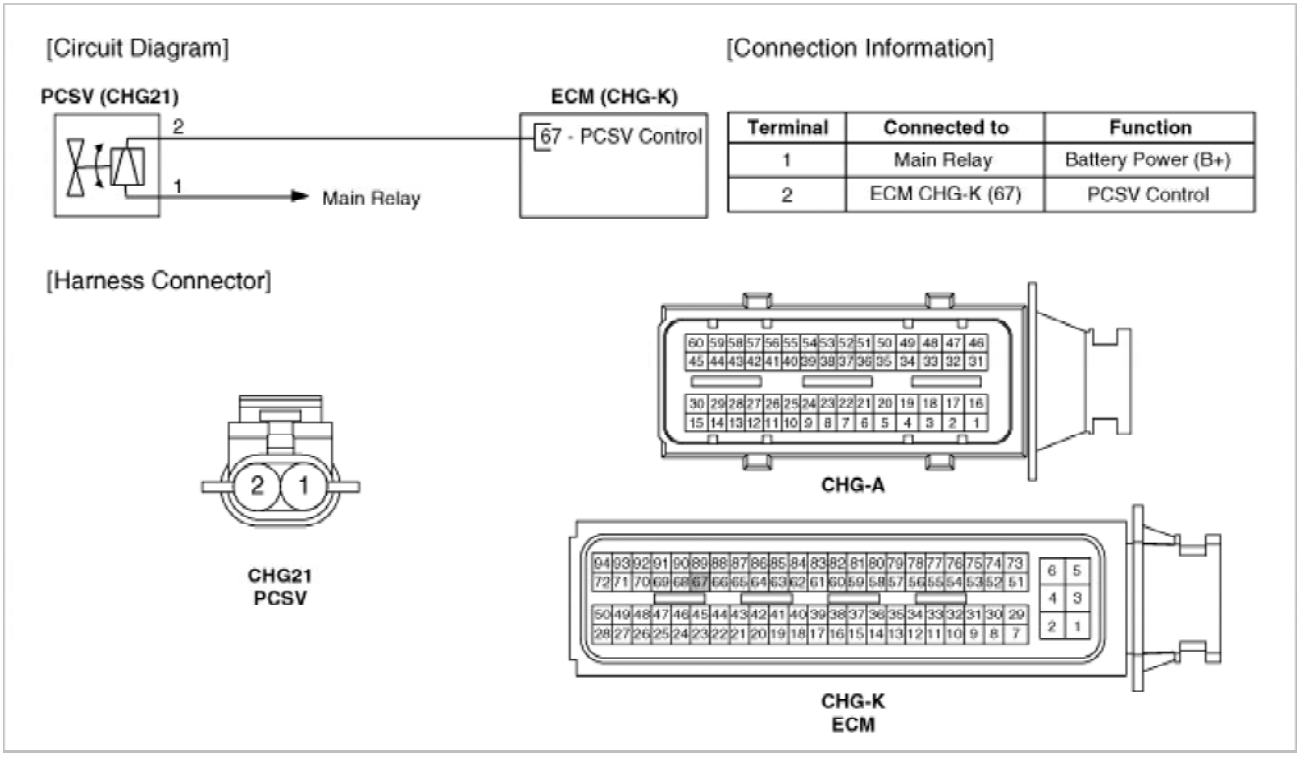

Fuel System > Engine Control System > Purge Control Solenoid Valve (PCSV) > Repair procedures

Inspection

1. Turn the ignition switch OFF.
2. Disconnect the PCSV connector.

mcx30.com

4. Check that the resistance is within the specification.

Specification: Refer to “Specification”

Removal

1. Turn the ignition switch OFF and disconnect the battery negative (-) cable.
2. Disconnect the purge control solenoid valve connector (A).
3. Disconnect the vapor hoses (B) from the purge control solenoid valve.
4. Remove the bracket installation bolt (C), and then remove the valve from the surge tank.

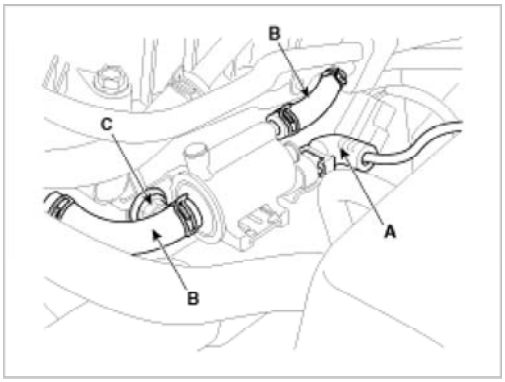

Installation

CAUTION

- Install the component with the specified torques.
- Note that internal damage may occur when the component is dropped. In this case, use it after inspecting.

CAUTION

- Use care to keep foreign material out of the valve.

1. Installation is reverse of removal.

Purge control solenoid valve bracket installation bolt: 9.8 ~ 11.8 N.m (1.0 ~ 1.2 kgf.m, 7.2 ~ 8.7 lb-ft)

Fuel System > Engine Control System > CVVT Oil Control Valve (OCV) > Description and Operation

Description

Continuous Variable Valve Timing (CVVT) system advances or retards the valve timing of the intake and exhaust valve in accordance with the ECM control signal which is calculated by the engine speed and load.
By controlling CVVT, the valve over-lap or under-lap occurs, which makes better fuel economy and reduces exhaust gases (NOx, HC) and improves engine performance through reduction of pumping loss, internal EGR effect, improvement of combustion stability, improvement of volumetric efficiency, and increase of expansion work.
This system consist of
-the CVVT Oil Control Valve (OCV) which supplies the engine oil to the cam phaser or runs out the engine oil from the cam phaser in accordance with the ECM PWM (Pulse With Modulation) control signal,
- the CVVT Oil Temperature Sensor (OTS) which measures the engine oil temperature,
-and the Cam Phaser which varies the cam phase by using the hydraulic force of the engine oil.
The engine oil getting out of the CVVT oil control valve varies the cam phase in the direction (Intake Advance/Exhaust Retard) or opposite direction (Intake Retard/Exhaust Advance) of the engine rotation by rotating the rotor connected with the camshaft inside the cam phaser.

mcx30.com

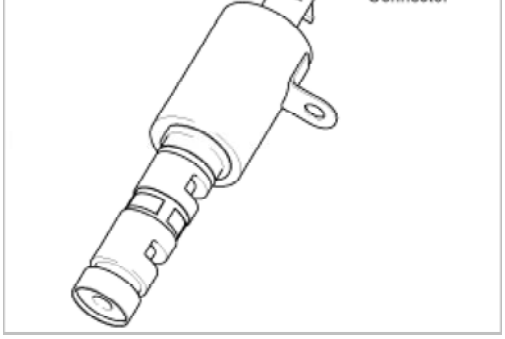

Fuel System > Engine Control System > CVVT Oil Control Valve (OCV) > Specifications

Specification

Item	Specification
Coil Resistance (Ω)	6.9 ~ 7.9 [20°C(68°F)]

Fuel System > Engine Control System > CVVT Oil Control Valve (OCV) > Schematic Diagrams

Circuit Diagram

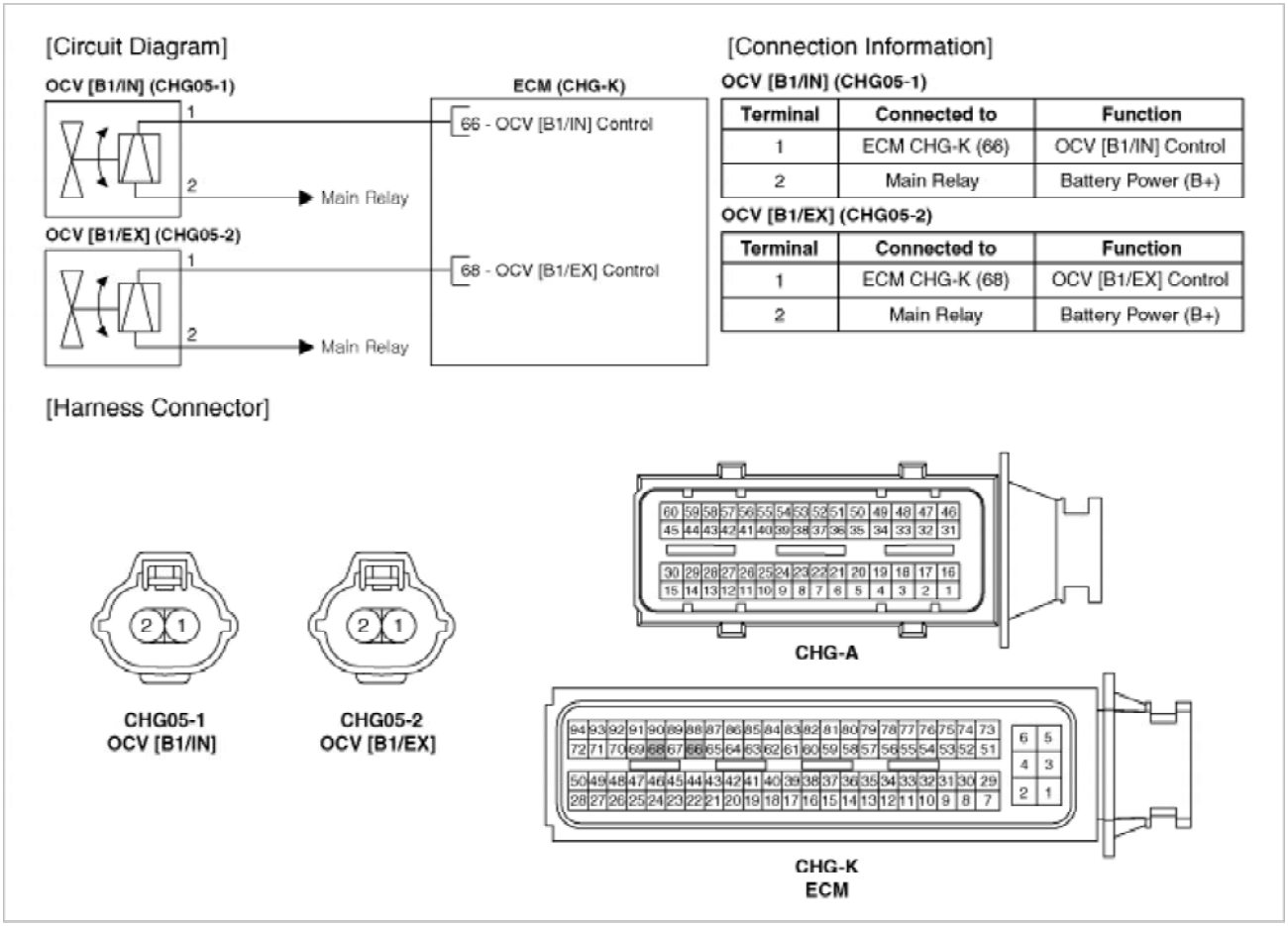

Fuel System > Engine Control System > CVVT Oil Control Valve (OCV) > Repair procedures

Inspection

mcx30.com

2. Disconnect the OCV connector.
3. Measure resistance between the OCV terminals 1 and 2.
4. Check that the resistance is within the specification.

Specification: Refer to “Specification”

Removal

1. Turn the ignition switch OFF and disconnect the battery negative (-) cable.
2. Disconnect the CVVT oil control valve connector (A).
3. Remove the installation bolt (B), and then remove the valve from the engine.

[Bank 1 / Intake]

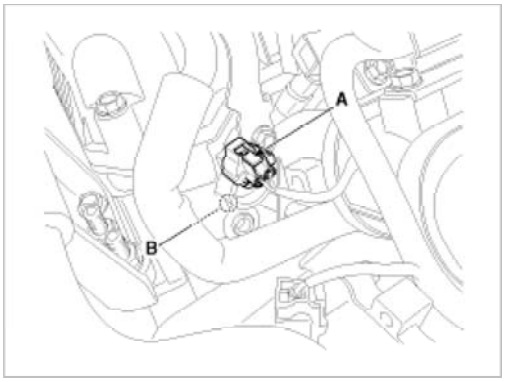

[Bank 1 / Exhaust]

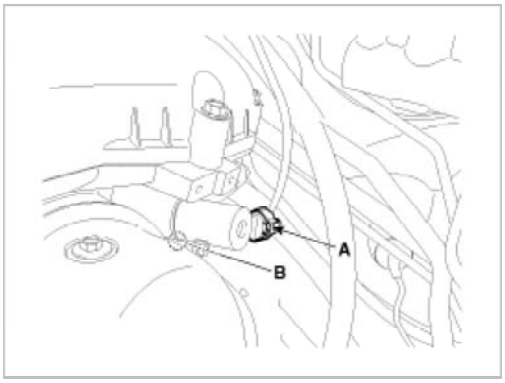

Installation

CAUTION

- Install the component with the specified torques.
- Note that internal damage may occur when the component is dropped. In this case, use it after inspecting.

CAUTION

- Apply engine oil to the valve O-ring.

1. Installation is reverse of removal.

CVVT oil control valve installation bolt:
9.8 ~ 11.8 N.m (1.0 ~ 1.2 kgf.m, 7.2 ~ 8.7 lb-ft)

mcx30.com

and Operation

Description

Variable Intake manifold Solenoid (VIS) valve is installed on the intake manifold. The VIS valve controls the vacuum modulator which activates a valve in the intake manifold. The ECM opens or closes this valve according to engine condition (Refer to below table).

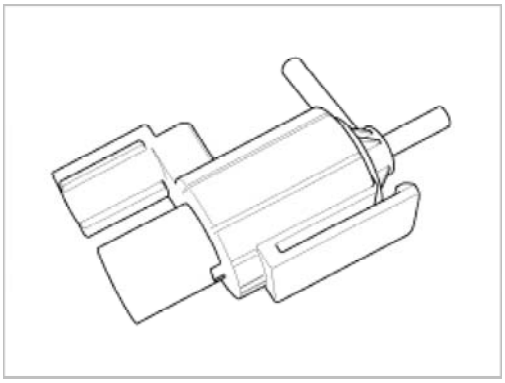

Engine condition	VIS valve	Operation
Medium speed	Closed	Increasing engine performance in low engine speed by reducing intake interference among cylinders
Low / High speed	Open	Minimizing intake resistance by shortening intake manifold length and increasing area of air entrance

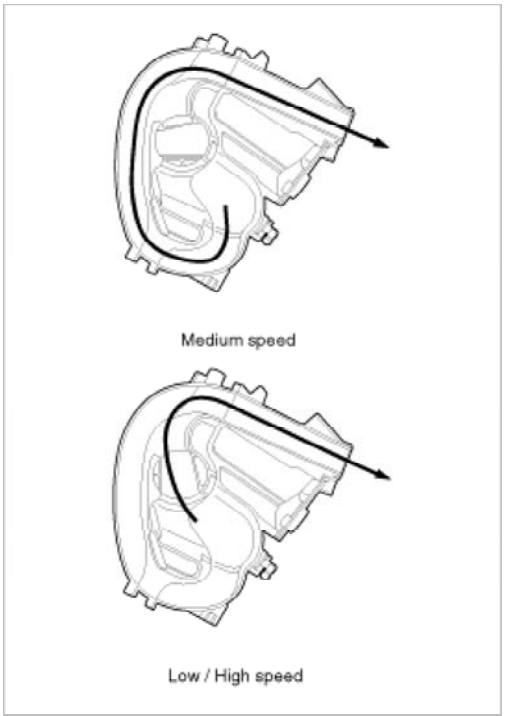

Fuel System > Engine Control System > Variable Intake Solenoid (VIS) Valve > Specifications

Specification

Item	Specification
Coil resistance (Ω)	30.0 ~ 35.0 [20°C(68°F)]

mcx30.com

Diagrams

Circuit Diagram

[Circuit Diagram]

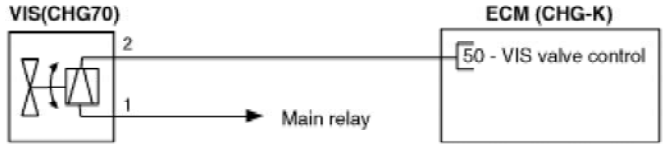

[Connection Information]

Terminal	Connected to	Function
1	Main relay	Power supply (B+)
2	ECM CHG-K (50)	VIS valve control

[Harness Connector]

CHG70
VIS VALVE

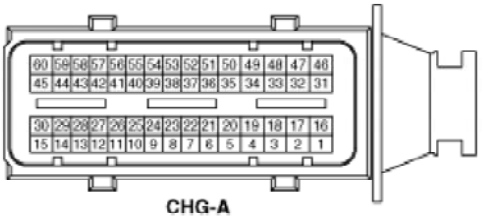

CHG-A

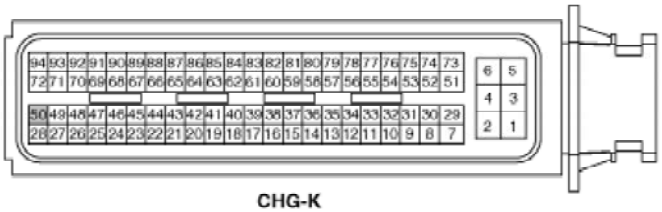

CHG-K
ECM

Fuel System > Engine Control System > Variable Intake Solenoid (VIS) Valve > Repair procedures

Inspection

1. Turn the ignition switch OFF.
2. Disconnect the VIS valve connector.
3. Measure resistance between VIS valve terminals 1 and 2.

Specification: Refer to "Specification"

Removal

1. Turn the ignition switch OFF and disconnect the battery negative (-) cable.
2. Disconnect the variable intake solenoid valve connector (A).
3. Disconnect the vacuum hoses (B) from the valve.
4. Remove the installation nut (C), and then remove the valve from the surge tank.

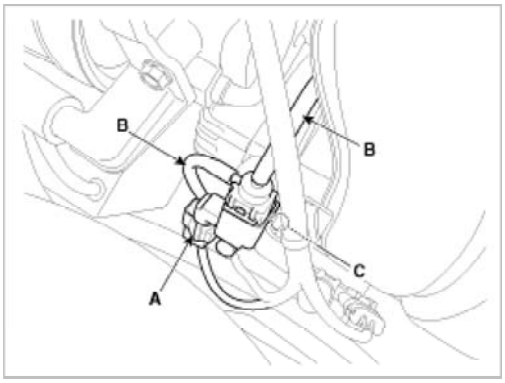

mcx30.com

Installation

CAUTION

- Install the component with the specified torques.
- Note that internal damage may occur when the component is dropped. In this case, use it after inspecting.

CAUTION

- Be careful of foreign material not to flow into the valve.

1. Installation is reverse of removal.

Fuel System > Engine Control System > Canister Close Valve (CCV) > Description and Operation

Description

Canister Close Valve (CCV) is installed on the canister ventilation line. It seals evaporative emission control system by shutting the canister from the atmosphere when leakage detecting system operates.

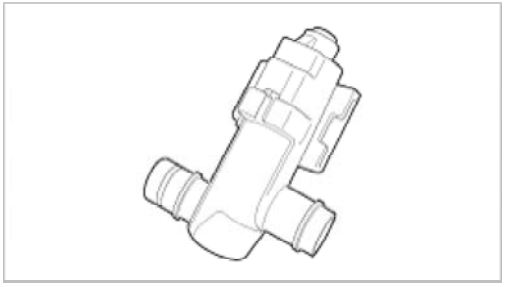

Fuel System > Engine Control System > Canister Close Valve (CCV) > Specifications

Specification

Item	Specification
Coil Resistance (Ω)	19.8 ~ 21.8 [20°C(68°F)

Fuel System > Engine Control System > Canister Close Valve (CCV) > Schematic Diagrams

Circuit Diagram

mcx30.com

[Circuit Diagram]

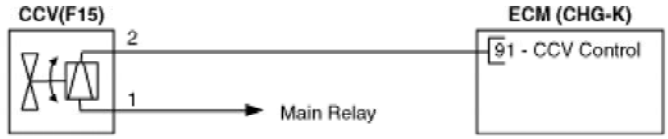

[Connection Information]

Terminal	Connected to	Function
1	Main Relay	Battery Power (B+)
2	ECM CHG-K (91)	CCV Control

[Harness Connector]

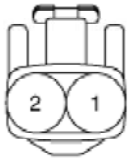

F15
CCV

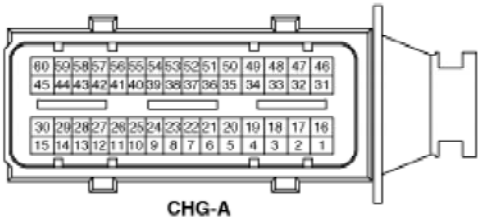

CHG-A

CHG-K
ECM

Fuel System > Engine Control System > Canister Close Valve (CCV) > Repair procedures

Inspection

1. Turn the ignition switch OFF.
2. Disconnect the CCV connector.
3. Measure resistance between the CCV terminal 1 and 2.
4. Check that the resistance is within the specification.

Specification: Refer to "Specification"

5. Disconnect the vapor hose connected with the canister from the CCV.
6. Connect a vacuum pump to the nipple.
7. Ground the CCV control line and apply battery voltage to the CCV power supply line.
8. Apply vacuum and check the valve operation.

Specification: Vacuum maintained

Removal

1. Turn the ignition switch OFF and disconnect the battery negative (-) cable.
2. Lift the vehicle.
3. Disconnect the canister close valve connector (A).
4. Disconnect the ventilation hose (B,C) from the fuel tank air filter and canister close valve.

mcx30.com

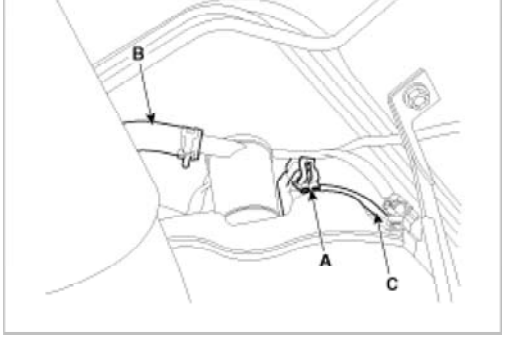

5. Remove the fuel tank air filter and canister close valve assembly (A) after removing the mounting nut (B).

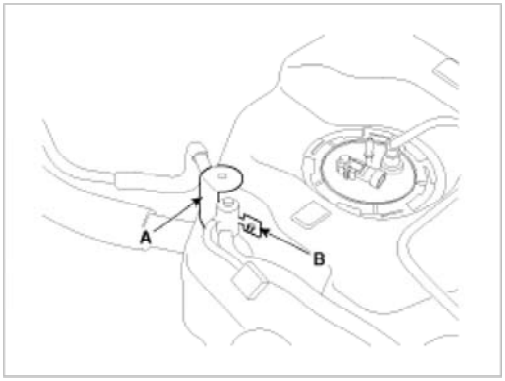

6. Release the lever (A), and then separate the canister close valve (B) from the fuel tank air filter (C) after rotating it in the direction of the arrow in the figure.

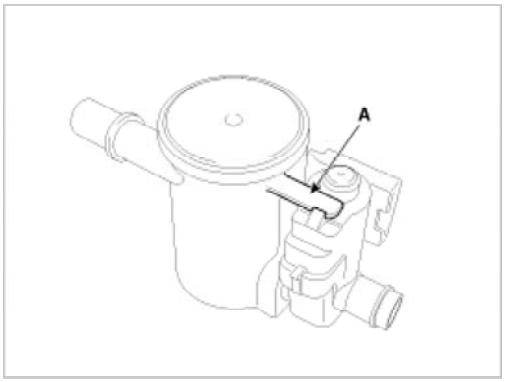

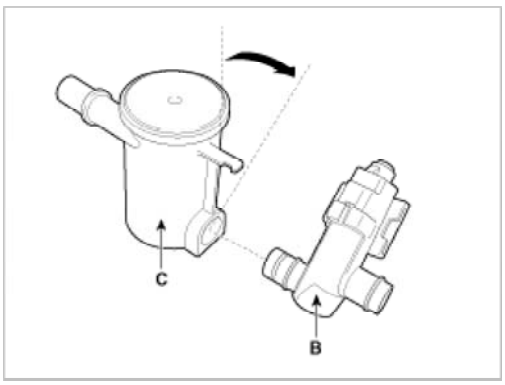

Installation

CAUTION

- Install the component with the specified torques.
- Note that internal damage may occur when the component is dropped. In this case, use it after inspecting.

1. Installation is reverse of removal.

mcx30.com

Canister close valve & fuel tank air filter bracket installation nut:
3.9 ~ 5.9 N.m (0.4 ~ 0.6 kgf.m, 2.9 ~ 4.3 lb-ft)

Fuel System > Engine Control System > Variable Charge Motion Actuator (VCMA) > Description and Operation

Description

The Variable Charge Motion Actuator (VCMA) is installed on the inlet of the intake manifold.
It consists of a DC motor which actuates the VCM valve and a position sensor which detects the position of the VCM valve.
The VCM system tumbles air flow entering into combustion chamber of each cylinder by closing the VCM valve in the cold start conditions.
This tumble effet reduces emisson gas by increasing air/ fuel mixture.

Fuel System > Engine Control System > Variable Charge Motion Actuator (VCMA) > Components and Components Location

Components

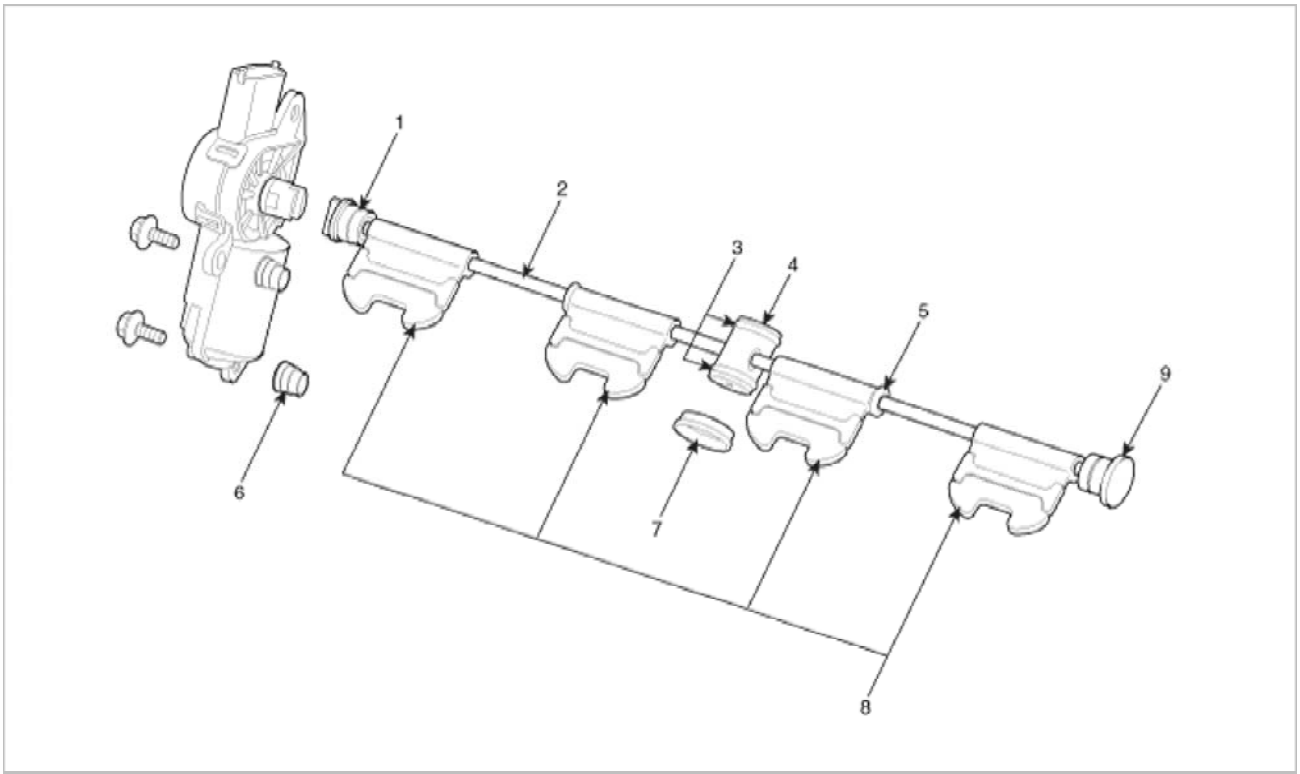

1. Coupling 2. Shaft 3. Stabilizer O-ring 4. Stabilizer 5. O-ring	6. Insert nut 7. Stabilizer Cover 8. Valve 9. Hole cover

Fuel System > Engine Control System > Variable Charge Motion Actuator (VCMA) > Specifications

Specification

Motor

Item	Specification

mcx30.com

Position sensor

Item	Specification
Coil Resistance (kΩ)	3.44 ~ 5.16 [20°C(68°F)]

Fuel System > Engine Control System > Variable Charge Motion Actuator (VCMA) > Schematic Diagrams

Circuit diagram

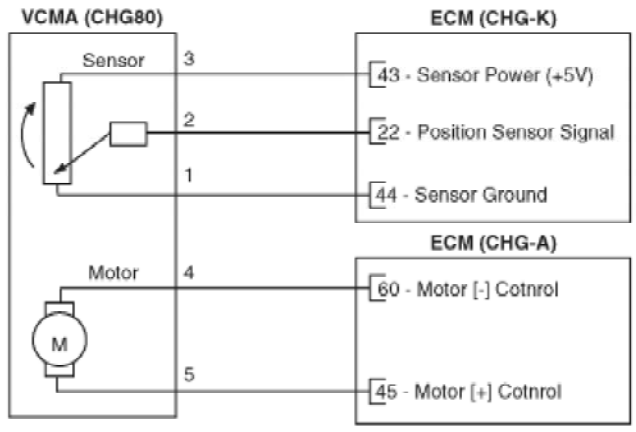

[Connection Information]

Terminal	Connected to	Function
1	ECM CHG-K (44)	Sensor Ground
2	ECM CHG-K (22)	Position Sensor Signal
3	ECM CHG-K (43)	Sensor Power (+5V)
4	ECM CHG-A (60)	Motor [-] Cotnrol
5	ECM CHG-A (45)	Motor [+] Cotnrol

[Harness Connector]

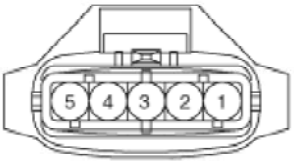

CHG80
VCMA

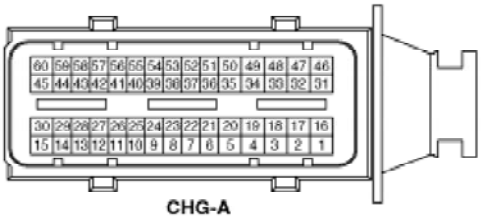

CHG-A

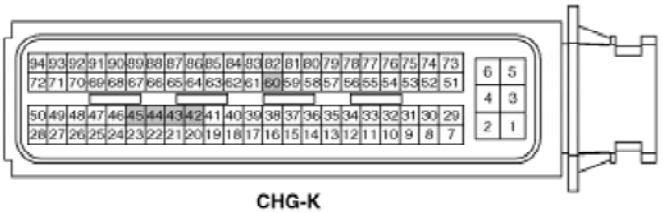

CHG-K
ECM

Fuel System > Engine Control System > Variable Charge Motion Actuator (VCMA) > Repair procedures

Inspection

1. Turn ignition switch OFF.
2. Disconnect the VCMA connector.
3. Check that the VCMA is not stuck by foreign material.
4. Measure resistance between motor (+) and (-) control terminals of the motor.
5. Check that the resistance is within the specification.

Specification: Refer to "Specification"

mcx30.com

7. Check that the resistance is within the specification.

Specification: Refer to "Specification"

Removal

1. Turn the ignition switch OFF and disconnect the battery negative (-) cable.
2. Disconnect the VCMA connector (A).
3. Disconnect the engine coolant hose (B).

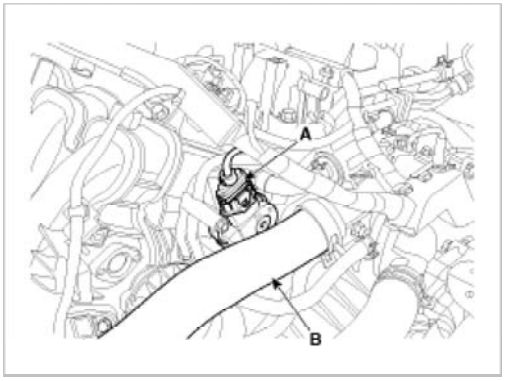

4. Remove the VCMA (A) after removing 3 installation bolts.

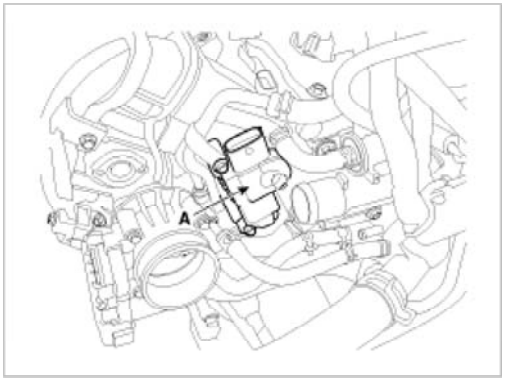

Installation

CAUTION

- Install the component with the specified torques.
- Note that internal damage may occur when the component is dropped. In this case, use it after inspecting.

CAUTION

The VCM actuator has to be installed at the fully closing positon of the VCM valve.
If it doesn't, the VCM coupling of the VCM shaft can't be put in the the VCM actuator.

1. Installation is reverse of removal.

Variable charge motion actuator installation bolt:
3.9 ~ 5.9 N.m (0.4 ~ 0.6 kgf.m, 2.9 ~ 4.3 lb-ft)

Fuel System > Fuel Delivery System > Components and Components Location

Components Location

mcx30.com

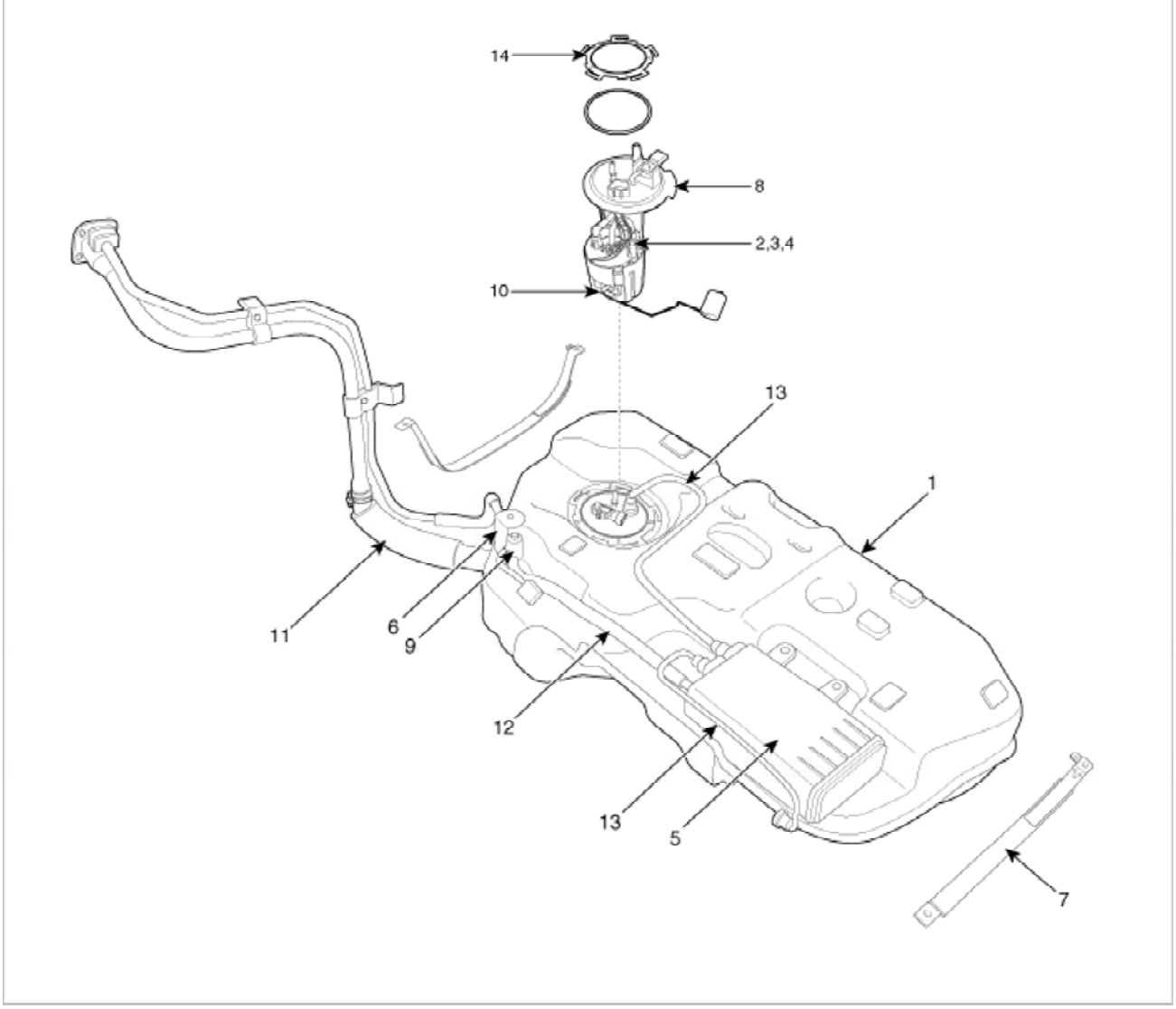

1. Fuel tank	8. Fuel tank pressure sensor (FTPS)
2. Fuel pump	9. Canister close valve (CCV)
3. Fuel filter	10. Fuel level sensor (FLS)
4. Fuel pressure regulator	11. Fuel filler hose
5. Canister	12. Ventilation hose
6. Fuel tank air filter	13. Vapor tube
7. Fuel tank band	14. Fuel pump locking ring

Fuel System > Fuel Delivery System > Repair procedures

Fuel Pressure Test

1. Release the residual pressure in fuel line (Refer to “Release Residual Pressure in Fuel Line” in this group).

> **CAUTION**
>
> When removing the fuel pump relay, a Diagnostic Trouble Code (DTC) may occur. Delete the code with the GDS after completion of “Release Residual Pressure in Fuel Line” work.

2. Install the Special Service Tool (SST).
   (1) Disconnect the fuel feed tube from the delivery pipe.

mcx30.com

CAUTION

There may be some residual pressure even after “Release Residual Pressure in Fuel Line” work, so cover the hose connection with a shop towel to prevent residual fuel from spilling out before disconnecting any fuel connection.

(2) Install the special service tool for measuring the fuel pressure in between the fuel feed tube and the fuel delivery pipe (Refer to the figure below).

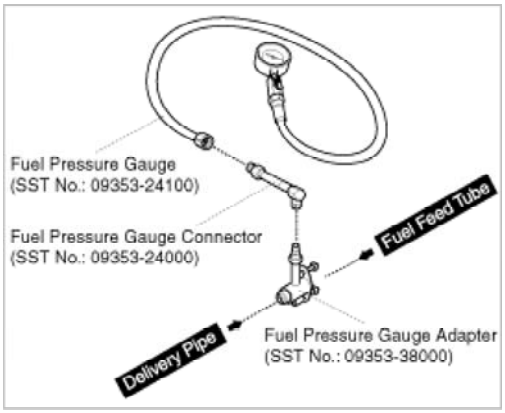

3. Inspect fuel leakage on connections among the fuel feed tube, the delivery pipe, and the SST components with IG ON.
4. Measure Fuel Pressure.
   (1) Start the engine and measure the fuel pressure at idle.

Fuel Pressure: 324 ~ 363 kPa (3.3 ~ 3.7 kgf/cm², 46.9 ~ 52.6 psi)

NOTE

If the fuel pressure differs from the standard value, repair or replace the related part (Refer to the table below).

Fuel Pressure	Cause	Related Part
Too Low	Fuel filter clogged	Fuel Filter
	Fuel leakage	Fuel Pressure Regulator
Too High	Fuel pressure regulator valve stuck	Fuel Pressure Regulator

   (2) Stop the engine, and then check for the change in the fuel pressure gauge reading.

Standard Value: The gauge reading should hold for about 5 minutes after the engine stops

NOTE

If the gauge reading should not be held, repair or replace the related part (Refer to the table below).

Fuel Pressure (After Engine Stops	Cause	Related Part
Fuel Pressure Drops Slowly	Leakage on injector	Injector
Fuel Pressure Drops Immediately	Check valve of fuel pump stuck open	Fuel Pump

   (3) Turn the ignition switch OFF.

5. Release the residual pressure in fuel line (Refer to “Release Residual Pressure in Fuel Line”).

CAUTION

When removing the fuel pump relay, a Diagnostic Trouble Code (DTC) may occur. Delete the code with the GDS

mcx30.com

6. Test End
   (1) Remove the Special Service Tool (SST) from the fuel feed tube and the delivery pipe.
   (2) Connect the fuel feed tube and the delivery pipe.

Release Residual Pressure in Fuel Line

CAUTION

There may be some residual pressure even after “Release Residual Pressure in Fuel Line” work, so cover the hose connection with a shop towel to prevent residual fuel from spilling out before disconnecting any fuel connection.

1. Turn the ignition switch OFF and disconnect the battery (-) cable.
2. Remove the fuel pump relay (A).

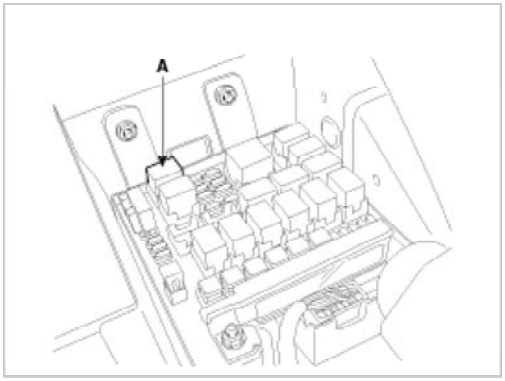

CAUTION

When removing the fuel pump relay, a Diagnostic Trouble Code (DTC) may occur. Delete the code with the GDS after completion of “Release Residual Pressure in Fuel Line” work.

3. Connect the battery (-) cable.
4. Start the engine and let idle, and then turn the ignition switch OFF after the engine has stopped on its own.
5. Disconnect the battery (-) cable, and then install the fuel pump relay (A).
6. Connect the battery (-) cable.
7. Delete the Diagnostic Trouble Code (DTC) related the fuel pump relay with the GDS.

Fuel System > Fuel Delivery System > Fuel Tank > Repair procedures

Removal

1. Release the residual pressure in fuel line (Refer to “Release Residual Pressure in Fuel Line” in this group).
2. Remove the rear seat cushion (Refer to “Seat” in BD group).
3. Remove the fuel pump service cover (A).

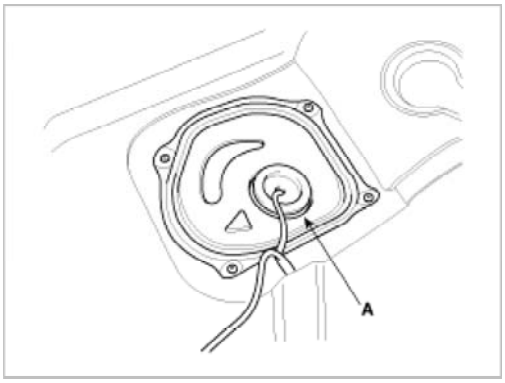

mcx30.com

5. Disconnect the fuel feed tube quick connector (C).

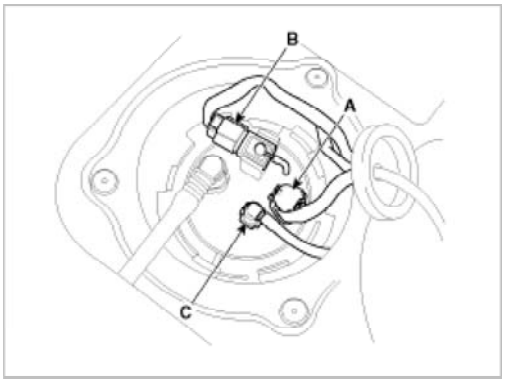

6. Remove the rear - LH wheel & tire.
7. Lift the vehicle and support the fuel tank with a jack.
8. Remove the center muffler assembly (Refer to “Intake And Exhaust System” in EM group).
9. Remove the propeller shaft (Refer to “Propeller Shaft Assembly” in DS group) [4WD].
10. Disconnect the fuel filler hose (A) and the ventilation hose (B).

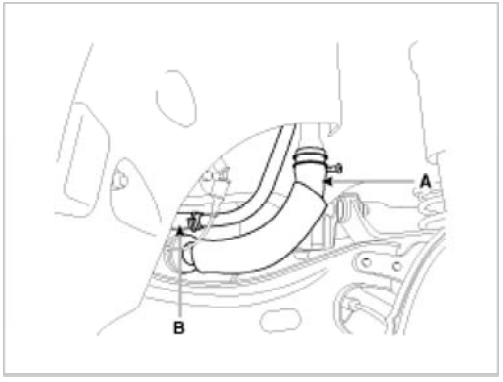

11. Disconnect thd canister close valve connector (A).

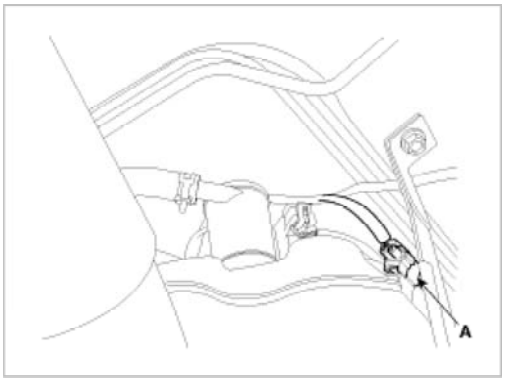

12. Disconnect the vapor tube quick-connector (A).

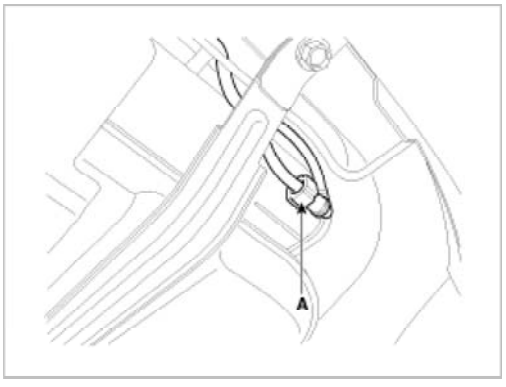

13. Remove the fuel tank from the vehicle after removing the fuel tank band (A).

mcx30.com

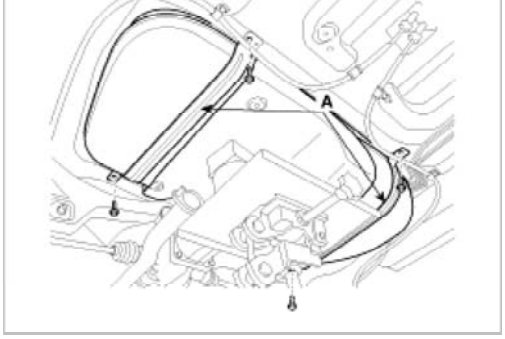

NOTE

When removing the fuel tank, the fuel tank must be tilted because of interfering with coupling.

Installation

1. Installation is reverse of removal.

Fuel tank band installation nut:
39.2 ~ 54.0 N.m (4.0 ~ 5.5 kgf.m, 28.9 ~ 39.8 lb-ft)

Fuel System > Fuel Delivery System > Fuel Pump > Repair procedures

Removal

1. Release the residual pressure in fuel line (Refer to “Release Residual Pressure in Fuel Line” in this group).
2. Remove the rear seat (Refer to “Seat” in BD group).
3. Remove the fuel pump service cover (A).

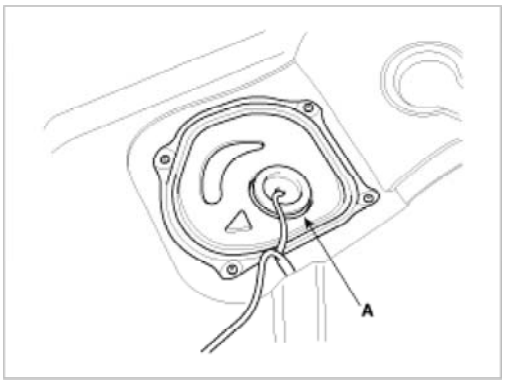

4. Disconnect the fuel pump connector (A) and the fuel tank pressure sensor connector (B).
5. Disconnect the fuel feed tube quick connector (C) and the vapor tube quick-connector (D).

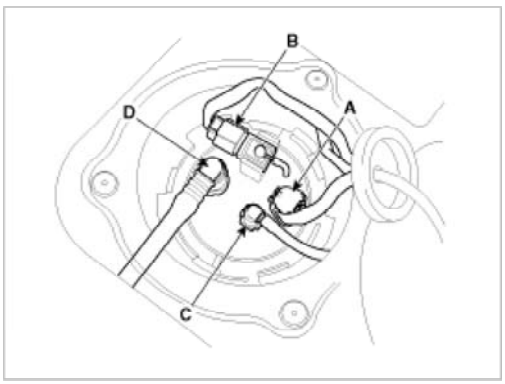

6. Remove locking ring (A) by using the special service tool (B) [No.:09310-2S200].

mcx30.com

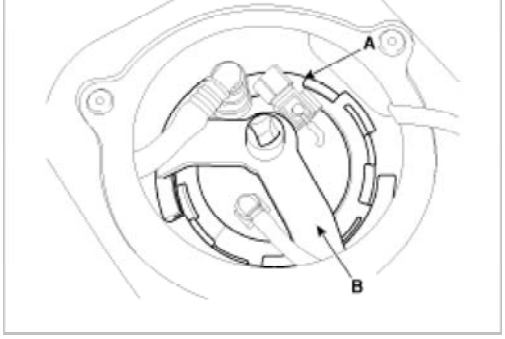

Fuel Pump locking ring loosening torque: Min. 68.65 M.m (Min. 7 kgf.m, Min. 50.6 lb-ft)

7. Remove the fuel pump from the fuel tank.

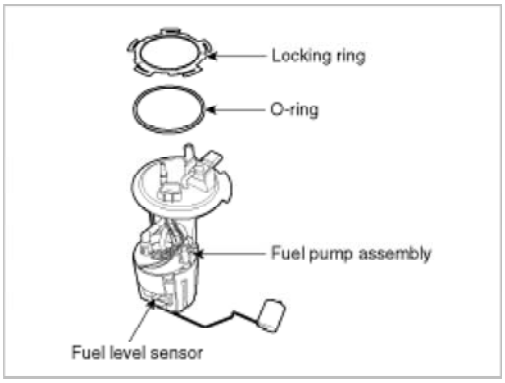

Installation

1. Installation is reverse of removal.

> **CAUTION**
>
> Be careful of fuel pump direction when installing (Refer to the groove in the fuel tank).

Fuel System > Fuel Delivery System > Filler-Neck Assembly > Repair procedures

Removal

1. Remove the rear-LH wheel, tire, and the inner wheel house.
2. Disconnect the fuel filler hose (A) and the ventilation hose (B).

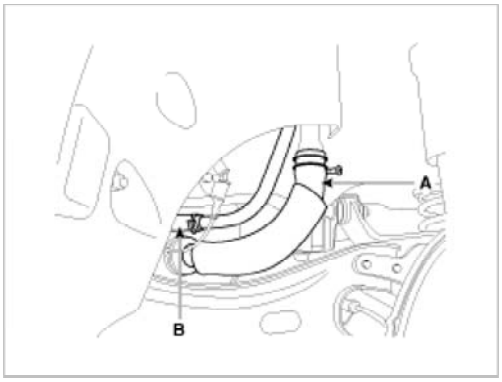

3. Open the fuel filler door and unfasten the filler-neck assembly mounting screw (A).

mcx30.com

4. Remove the filler-neck assembly from the vehicle after removing the bracket mounting nut (A).

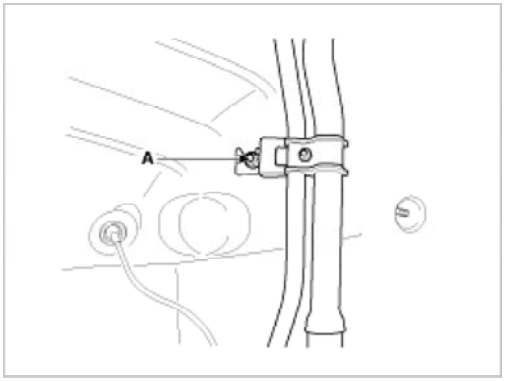

Installation

1. Installation is reverse of removal.

Filler-neck assembly bracket installation nut :
3.9 ~ 5.9 N.m (0.4 ~ 0.6 kgf.m, 2.9 ~ 4.3 lb-ft)

Fuel System > Fuel Delivery System > Accelerator Pedal > Repair procedures

Removal

1. Turn the ignition switch OFF and disconnect the negative (-) battery cable.
2. Disconnect the accelerator position sensor connector (A).

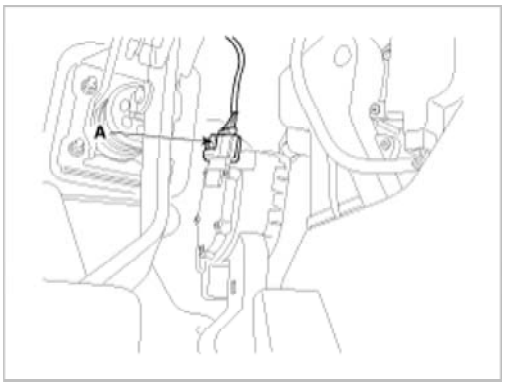

3. Remove the installation nuts (B), the bolt (C) and then remove the accelerator pedal module.

mcx30.com

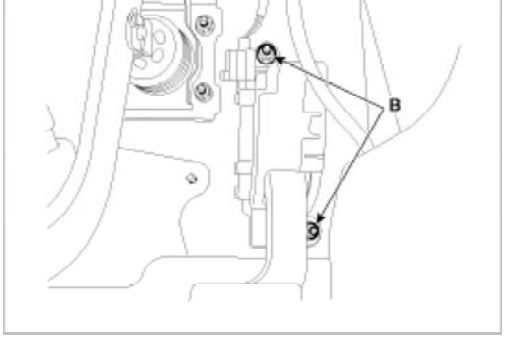

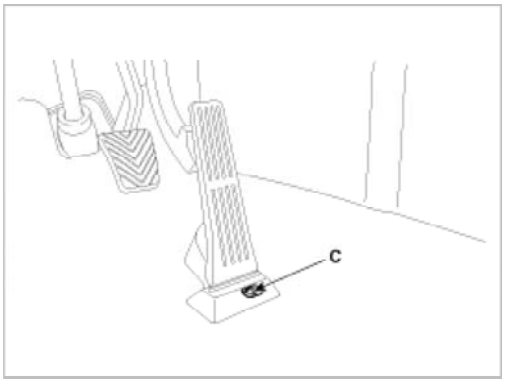

Installation

1. Installation is reverse of removal.

Accelerator pedal module installation nut:
16.7 ~ 25.5 N.m (1.7 ~ 2.6 kgf.m, 12.3 ~ 18.8 lb-ft)
Accelerator pedal module installation bolt:
7.8 ~ 11.8 N.m (0.8 ~ 1.2 kgf.m, 5.8 ~ 8.7 lb-ft)

Fuel System > Fuel Delivery System > Delivery Pipe > Repair procedures

Removal

1. Turn the ignition switch OFF and disconnect the battery negative (-) cable.
2. Release the residual pressure in fuel line (Refer to “Release Residual Pressure in Fuel Line” in this group).

> CAUTION
>
> When removing the fuel pump relay, a Diagnostic Trouble Code (DTC) may occur. Delete the code with the GDS after completion of “Release Residual Pressure in Fuel Line” work.

3. Disconnect the injector connector (A).
4. Remove the wiring harness bracket installation bolt (B).
5. Remove the installation nut, and then disconnect the fuel feed tube (C).
6. Remove the installation bolt (D), and then remove the delivery pipe & injector assembly from the engine.

mcx30.com

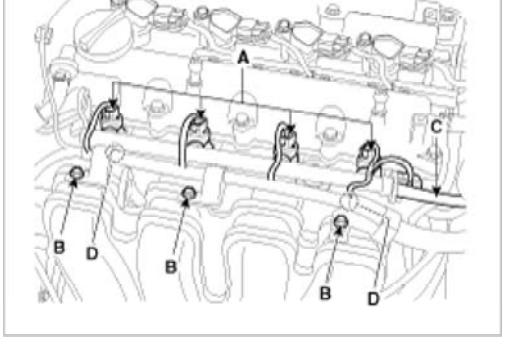

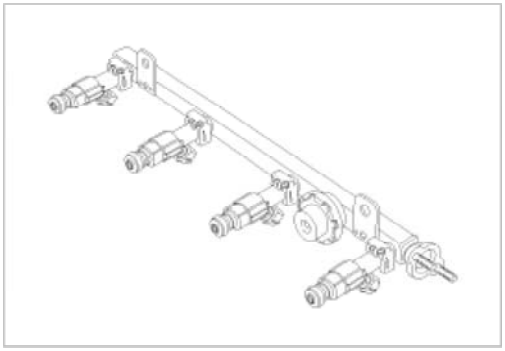

Installation

1. Installation is reverse of removal.

Delivery pipe installation bolt:
18.6 ~ 23.5 N.m (1.9 ~ 2.4 kgf.m, 13.7 ~ 17.4 lb-ft)
Delivery pipe installation nut (↔ Fuel feed tube):
7.8 ~ 9.8 N.m (0.8 ~ 1.0 kgf.m, 5.8 ~ 7.2 lb-ft)

mcx30.com